Chimney Cupboard • Hall Mirror • Garden Seat • Mortise & Tenon

Woodsmith®

Vol. 20 / No. 116

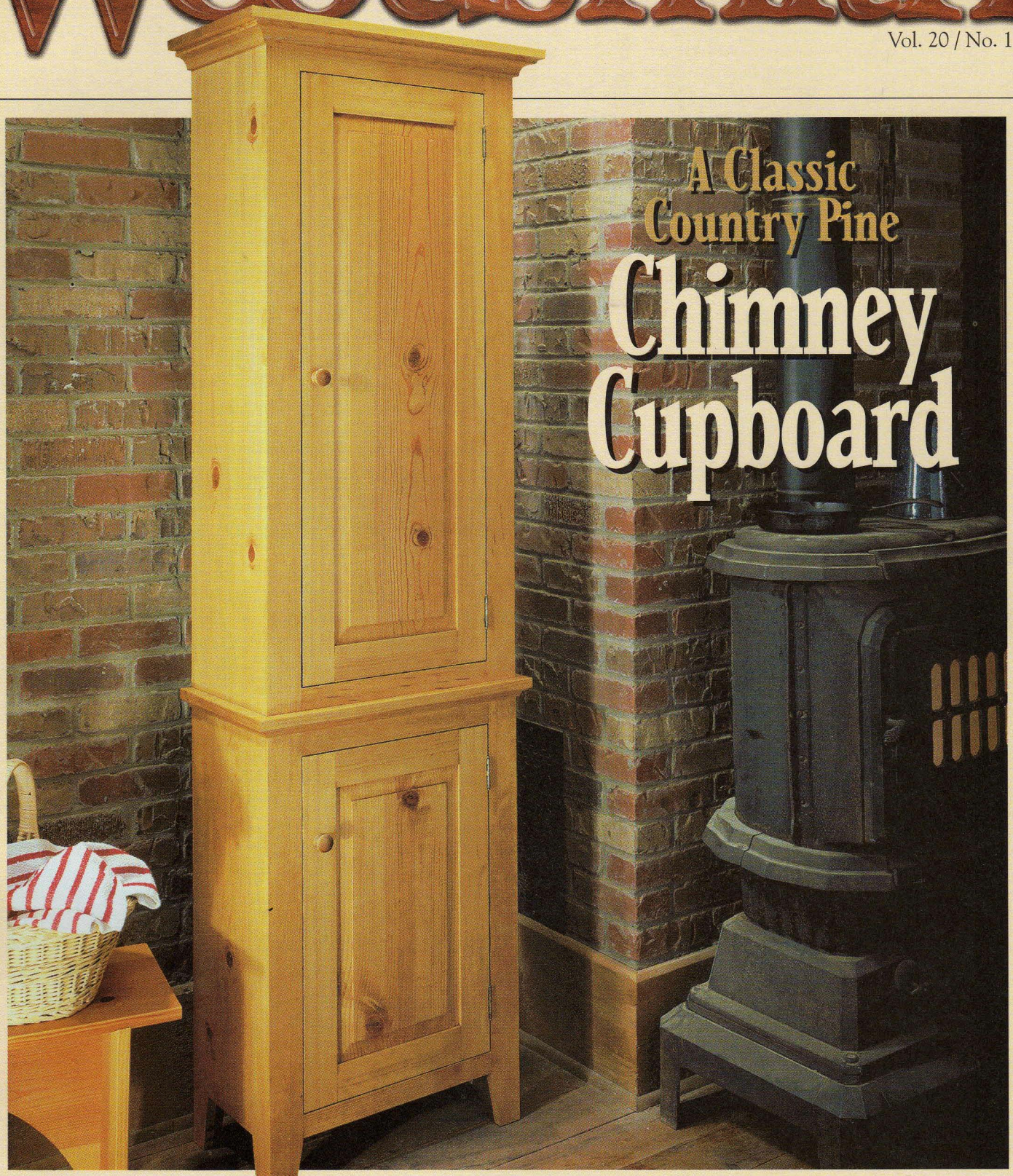

A Classic Country Pine Chimney Cupboard

Woodsmith

No. 116 April, 1998

Publisher Donald B. Peschke
Editor Terry J. Strohman
Associate Editors Jon Garbison, Vincent Ancona
Art Director Todd Lambirth
Senior Illustrators David Kreyling, Dirk Ver Steeg, Mike Mittermeier

CREATIVE RESOURCES

Creative Director: Ted Kralicek • *Project Developer:* Ken Munkel • *Sr. Project Designer:* Kent Welsh • *Project Designer:* Kevin C. Boyle • *Shop Manager:* Steve Curtis • *Shop Craftsman:* Steve Johnson • *Photography Dir.:* Lark Smothermon • *Senior Photographer:* Crayola England

BOOKS

Executive Editor: Douglas L. Hicks • *Senior Graphic Designer:* Chris Glowacki

CIRCULATION

Subscriber Services Director: Sandy Baum • *New Business Director:* Glenda K. Battles • *New Business Manager:* Todd Bierle • *Promotion Manager:* Rick Junkins • *Renewal Manager:* Paige Rogers • *Billing Mgr.:* Rebecca Cunningham • *Assistant Subscription Mgr.:* Joy Krause • *Associate Graphic Design Director:* Susie Rider • *Sr. Graphic Designer:* Cheryl L. Simpson

CORPORATE SERVICES

Vice President of Planning and Finance: Jon Macarthy • *Controller:* Robin Hutchinson • *Sr. Account.:* Laura Thomas • *Accts. Payable:* Mary J. Schultz • *Accts. Receivable:* Margo Petrus • *Production Dir.:* George Chmielarz • *Production Assistant:* Susan Dickman • *Electronic Pub:* Douglas M. Lidster • *Pre-press Image Specs.:* Troy A. Clark, Minniette Bieghler • *New Media Manager:* Gordon C. Gaippe • *Web Site Art Director:* Gene Pedersen • *Network Administator:* Al Barnes • *I.S. Support Assistant:* Chris Harrison • *H.R. Assistant:* Kirsten Koele • *Admin. Assistant:* Julia Fish • *Receptionists:* Jeanne Johnson, Sheryl Ribbey • *Special Projects Dir.:* Saville H. Inman • *Building Maint.:* Ken Griffith

WOODSMITH MAIL ORDER

Operations Director: Bob Baker • *Materials Mgr:* Mark Mattiussi • *Customer Service Mgr.:* Jennie Enos • *Warehouse Supr.:* Nancy Johnson • *Buyer:* Linda Jones • *Technical Service Rep.:* Matt TeRonde • *Oper. Assist.:* Tammy Aldini • *Team Leader:* Karla Eslinger • *Cust. Serv. Reps.:* Anna Cox, Tammy Truckenbrod, Nancy Downey, Adam Best, Deborah Rich • *Warehouse:* Sylvia Carey • *Quality Control Tech.:* Frank Johnson

WOODSMITH STORE

Manager: Dave Larson • *Assistant Manager:* Paul Schneider • *Sales Staff:* Pat Lowry, Jerome Herr, Wendell Stone, Jim Barnett, Kathy Smith, John Johnson • *Office Manager:* Vicki Edwards

Woodsmith® (ISSN 0164-4114) is published bimonthly (Feb., Apr., June, Aug., Oct., Dec.) by August Home Publishing Company, 2200 Grand, Des Moines, IA 50312.

Woodsmith® is a registered trademark of August Home Publishing. **Copyright©** 1998 August Home Publishing Company. All rights reserved.

Subscriptions: Single copy: $4.99. One year subscription (6 issues), $24.95. (Canada/Foreign add $5 per year, U.S. funds.)
Periodicals Postage Paid at Des Moines, IA and at additional offices. USPS/Heartland Press Automatable Poly.
Postmaster: Send change of address to *Woodsmith*, Box 37112, Boone, IA 50037-2112.
Subscription Questions? Write to *Woodsmith*, P.O. Box 842, Des Moines IA 50304-9961 or call 1-800-333-5075, 8:00 am to 5:00 pm, Central Time, weekdays.
E-Mail: woodsmith@woodsmith.com
World Wide Web: http://www.woodsmith.com

Printed in U.S.A.

EDITOR'S COLUMN

SAWDUST

When Vince, one of our associate editors, first suggested we build a "chimney cupboard," I have to confess that I didn't have the slightest idea what he was talking about. But after he showed me a photograph and a couple of sketches, it was easy to see how this type of cabinet got its name.

A chimney cupboard is tall and narrow, just like the brick chimneys found in many older homes. (In fact, cupboards like these were often built to fit right next to the chimneys to put the tall, narrow space to good use.)

Well, that's a neat bit of trivia. But let's face it. Most of us don't have exposed chimneys anymore. So I was a bit worried that this project might not be practical in a home today.

VERSATILE DESIGN. But the more I thought about it, the more I realized how versatile a piece of furniture like this can be. It can be used in a kitchen, a bathroom, or a bedroom — any place where you want storage without sacrificing much floor space.

Besides providing plenty of storage, this project also packs in a lot of traditional woodworking. It features solid-wood construction, frame and panel doors, and mortise and tenon joinery. And to make our cupboard even more versatile, we "built in" a couple of non-traditional options.

TWO-PIECE CONSTRUCTION. Typically, a chimney cupboard would have been built as a single unit with long solid-wood panels for the sides. Here, we took a different approach. We made our cupboard in *two* pieces: a lower cupboard and an upper one.

This two-piece construction has several advantages. First, you don't have to worry about gluing up flat panels that are six-and-a-half feet long. Second, if the cupboard needs to be moved, you can take the two pieces apart and move them separately.

But what I like best about this two-piece design is that you don't have to build both pieces. You can make just the lower part of the cupboard (and not build the top half). Which means you'll still get a chance to try out all the same techniques for only half the time and money.

Speaking of money, I should mention that we built this cupboard out of pine. Not only is this the traditional choice of material for a project like this, but it's relatively inexpensive. We even incorporated some pre-made molding and a "beaded board" back, all of which can be found at a local home center or lumberyard.

GARDEN SEAT. While you're at it, you may want to pick up materials for another project in this issue — a garden seat. Like the chimney cupboard, it's built with inexpensive dimensional lumber. (This time, we used Douglas fir.)

Besides being made from readily available materials, this garden seat is also easy to build. In fact, you can probably "knock it out" in a weekend.

Terry

A LOOK INSIDE

CONTENTS

Features

Chimney Cupboard 6

All of the same design elements that made the originals so striking are also featured in this country project: tall, narrow proportions, raised panels, a beaded board back, and applied molding.

Hall Mirror 16

A simple style is reflected in the easy-to-build design of this frame. It has cap molding on both the top and bottom and a gentle curve cut along the top rail. But the main attraction here is the row of accent "windows," which reveal a cherry background.

Garden Seat 24

It's a traditional garden bench — without the back or arms. Build it in a weekend, and the result will be a comfortable resting spot that looks at home in a wide variety of settings.

Mortise & Tenon 30

The mortise and tenon is one of the most basic joints in woodworking, and there are a number of different approaches and tools you can use to create it. Here's a quick look at some of the different techniques we use in our shop.

Departments

Tips & Techniques 4
Shop Notes 22
Talking Shop 34
Sources 35

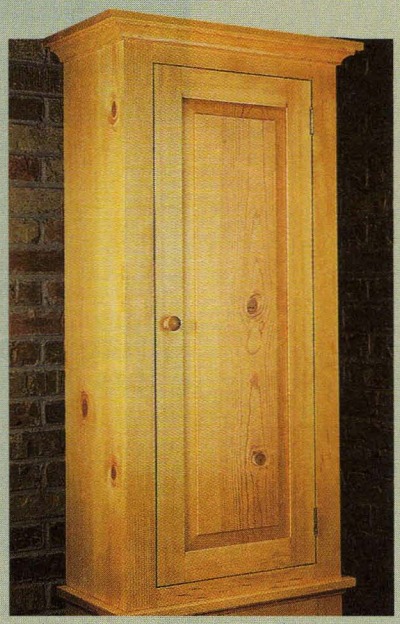

Chimney Cupboard *page 6*

Hall Mirror *page 16*

Garden Seat *page 24*

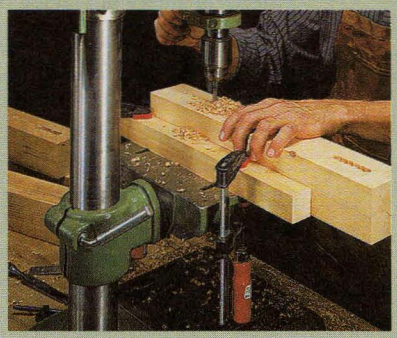

Mortise & Tenon *page 30*

TIPS & TECHNIQUES

Fitting Inset Doors

Fitting inset doors to a cabinet opening has always been a hassle for me, especially if the cabinet opening isn't perfectly square. But recently, I came up with a quick and easy method of trimming doors with a router and flush-trim bit.

To begin, just mark the desired trim line near the edge of the door. Then place a long, straight board under the door along the layout line to act as a guide for the bearing of the router bit, see drawing at right.

With the door and guide clamped down to a bench or other support, it's a simple matter to trim the door up to the layout line with a flush-trim bit, see detail 'a'.

Barry Wood
Naperville, Illinois

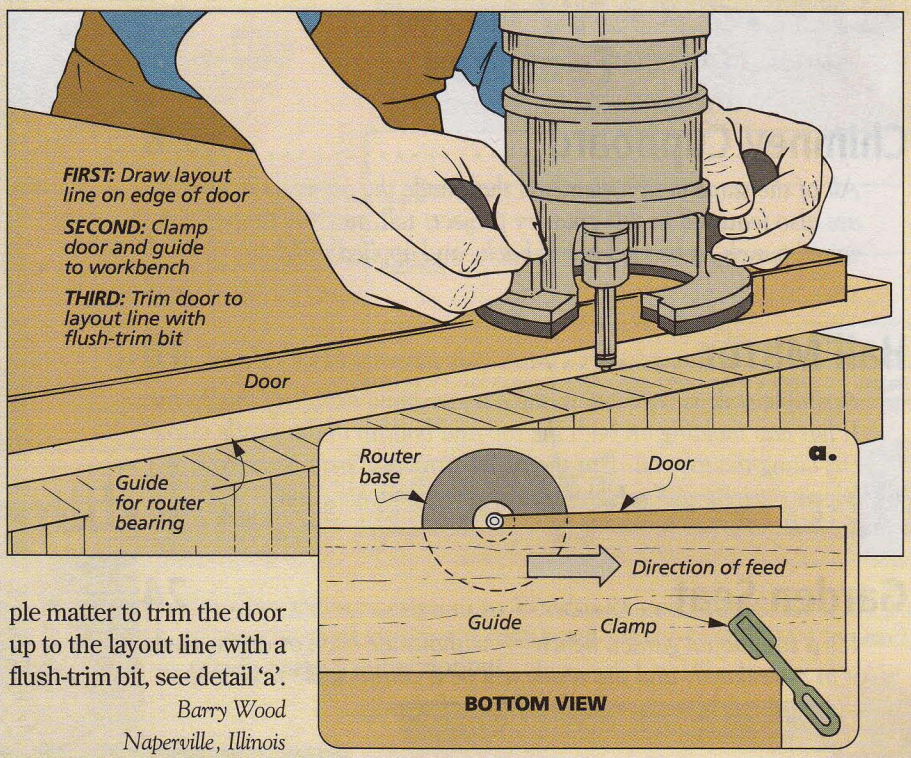

Glue Roller

Like a lot of woodworkers, I use a paint roller to spread glue over large surfaces. But instead of using an ordinary roller cover, I cut a piece of PVC pipe to fit over the roller cage, see photo.

The PVC spreads the glue evenly and smoothly. And after the glue dries, it chips off the roller easily, so it can be used again.

Robert Conroy
Telford, Pennsylvania

Lid Chain Stay

When building a blanket chest recently, I mounted a brass chain to the underside of the lid and the side of the chest to prevent the top from opening too far. The problem is that the strain exerted on the chain by the weight of the lid tends to pull the mounting screw straight out of the lid.

To solve this problem, I came up with a better method of attaching the chain. Instead of simply screwing it to the underside of the lid, I pinned it in place with a brass rod.

To do this, just use a ½"-dia. Forstner bit to drill a hole about ½" deep on the underside of the top, near the edge, see drawing at right. Then drill an ⅛"-dia. cross hole for the rod in the edge of the top.

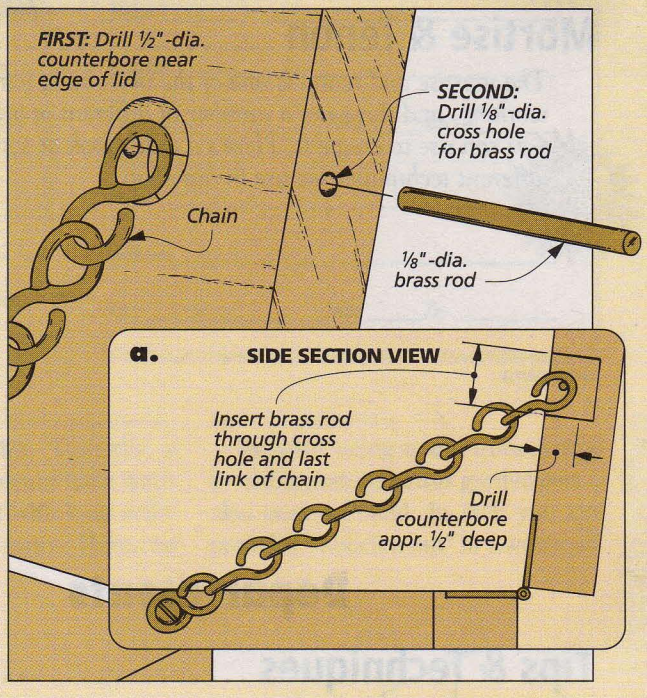

To attach the chain, simply drive the brass rod through the cross hole and the last link of the chain, pinning it in place, see detail 'a'. The other end of the chain is simply screwed to the side of the chest.

Wayne Fitzpatrick
University Place, Washington

Countersink Tip

Recently, after gluing up a number of small drawers, I suddenly realized that I had failed to drill and countersink holes on the back of the drawer fronts for the pulls. Drilling the holes was not a problem, but the drawers were too small to allow my drill to fit inside to countersink the holes.

As I sat contemplating my dilemma, an idea suddenly hit me. I simply reversed the countersink cutter on the end of the drill bit, see photo.

With the bit inserted through the hole and then chucked up in the drill, all you have to do is reverse the direction of the drill and gently pull back on the bit to countersink the hole.

James A. Johnson
Brunswick, Ohio

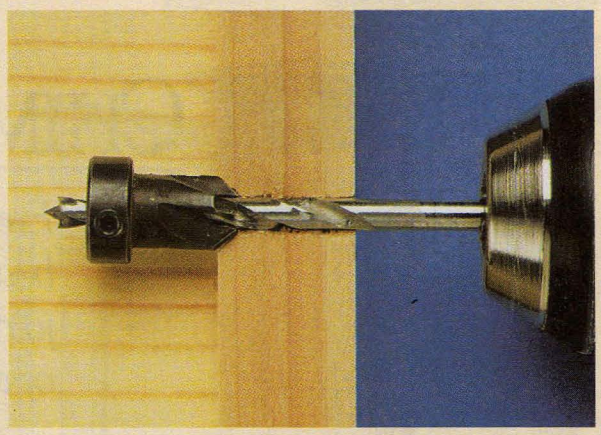

QUICK TIPS

STUBBORN SANDING SLEEVES

I use an oscillating spindle sander for a lot of my projects. But when changing grits, I sometimes have trouble removing a stubborn sanding sleeve from the rubber sanding drum.

To loosen the sleeve, I place the drum in the freezer for a while (fifteen minutes usually does the trick). The cold temperature of the freezer causes the rubber drum to shrink, allowing me to easily remove the sanding sleeve.

Don Osborn
Westminster, Colorado

CORD HOLDERS

To make my stationary power tools mobile, I mounted them on roll-around bases. But I've never found a way to keep the power cord from trailing behind on the floor when moving a tool around my shop — that is, until recently.

I purchased some cord holders from a vacuum cleaner dealer. (The kind that the cord winds around on some upright vacuums.) Mounted onto the base of each tool, they provide a perfect way to keep the cord stored neatly.

John Belt
Wichita, Kansas

SUBMIT YOUR TIPS

If you would like to share an *original* shop-tested tip, send it to: *Woodsmith,* Tips and Techniques, 2200 Grand Avenue, Des Moines, Iowa 50312. Or if it's easier, FAX it to us at: 515-282-6741. Or use our E-Mail address: woodsmith@woodsmith.com.

Include a brief explanation and sketch or photo. If your tip is published, you'll receive $30 to $150, depending on the published length. And don't worry, we'll rewrite the tip and redraw the art, if necessary. Also, *please* include a daytime phone number so we can contact you if we have any questions regarding your tip.

Stop Collar

I use an adjustable circle cutter bit for making wheels and other circles. But sometimes I have difficulty adjusting the bit to the right diameter. When I loosen the set screw to move the cutter arm, I invariably move it too far in one direction or the other.

To make it easier to fine-tune the diameter of the bit, I added a drill bit stop collar to the tail end of the cutter arm, see drawing.

After initially setting the cutter arm, slide the stop against the arbor and tighten the set screw. The collar can now be used as a gauge for making adjustments to the cutter arm.

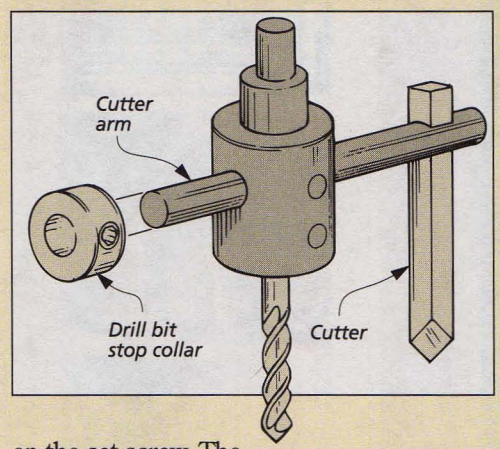

Henry Fischer
Hastings-on-Hudson, New York

Silicone Feet

Instead of using felt dots on the bottom of small boxes, I've come up with a method of making "feet," using clear silicone caulk.

Start by drilling a shallow, 1/4"-dia. hole in each corner of the bottom of the box. Then squeeze a "dollop" of silicone into each hole, allowing the sealant to completely fill and overflow the hole. Try to use the same amount of silicone in each hole, see drawing at right.

Now tape a couple of 1/8"-thick spacers to the bottom of the box and place it (right side up) on a piece of wax paper to level out the feet, see detail 'a'. After the silicone has set up (overnight), the spacers can be removed.

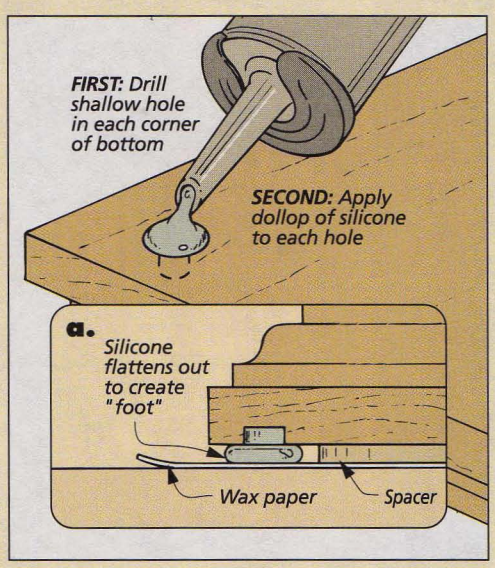

Jim Garrison
Jamestown, North Carolina

CHIMNEY CUPBOARD

From the raised panels and beaded board back to the mortise and tenon joinery, this project contains a number of time-tested design features.

Some folks have a tendency to turn their noses up at anything labeled "country." They equate the term with rough, slip-shod construction or an awkward, out-dated design.

Maybe it's just my Midwest upbringing, but to me, "country" has an altogether different meaning. Sure, when I think of a piece of country furniture, I think of a simple, straightforward design. One with clean lines and without a lot of fussy details.

But I also think of something that is carefully crafted, built with pride by someone who takes the time to get everything right because he knows that whatever it is he's building will probably outlast him by generations.

That's the approach we took when designing and building this chimney cupboard. In keeping with tradition, the design is simple and unpretentious. Mortise and tenon joints are used throughout. And the materials are all commonly available at most lumberyards. But we added a few "twists" to give you some options when building the project.

TWO-PIECE CONSTRUCTION. First off, we made our chimney cupboard in two pieces, a lower cupboard and an upper one. This makes it easier to transport the chimney cupboard if you ever have to move. But it also turns one project into two. We designed the lower cupboard to work as a stand-alone piece of furniture. So if you don't need (or want) all that storage space, you can simply build the lower half.

GLASS-FRONT DOOR. The second option we added to this project is a glass-front door (on the upper cupboard). The glass door allows you to see what's inside. So you could even use this cupboard as a display case in the living room or a hallway.

WOOD. For a country project like this chimney cupboard, no other wood seems quite as appropriate as pine. And one of the nice things about pine is that it's relatively inexpensive (we used #2 common pine) and readily available in most areas of the country.

There's one other reason we chose pine. It allowed us to use commercially-made moldings and beaded boards for the back, see photo. Of course, you could make your own moldings and beaded boards if you want to use a different kind of wood. But by using pine, we were able to purchase just about everything we needed for this cupboard at a home improvement center.

FINISH. When it came time to decide on a finish, we wanted to select something that would look appropriate for this type of project. Paint was the first option we considered. But after taking a vote, we decided to go with a stain to give the wood a warm, old-time look. And since staining pine can be tricky (it tends to get kind of blotchy), we've included a special section on finishing pine at the end of this article, see page 15.

Construction Details

OVERALL DIMENSIONS: 78"H x 23½"W x 13¾"D

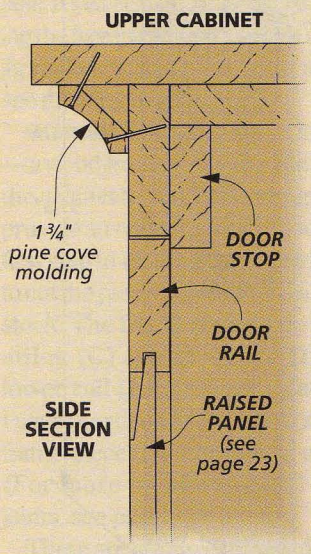

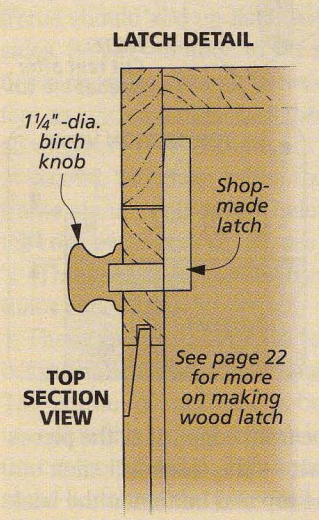

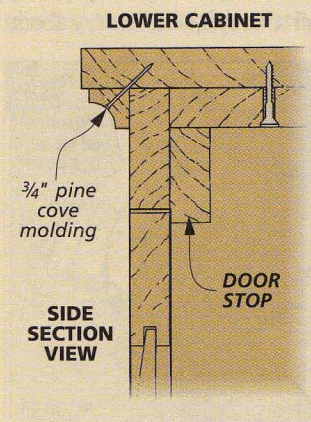

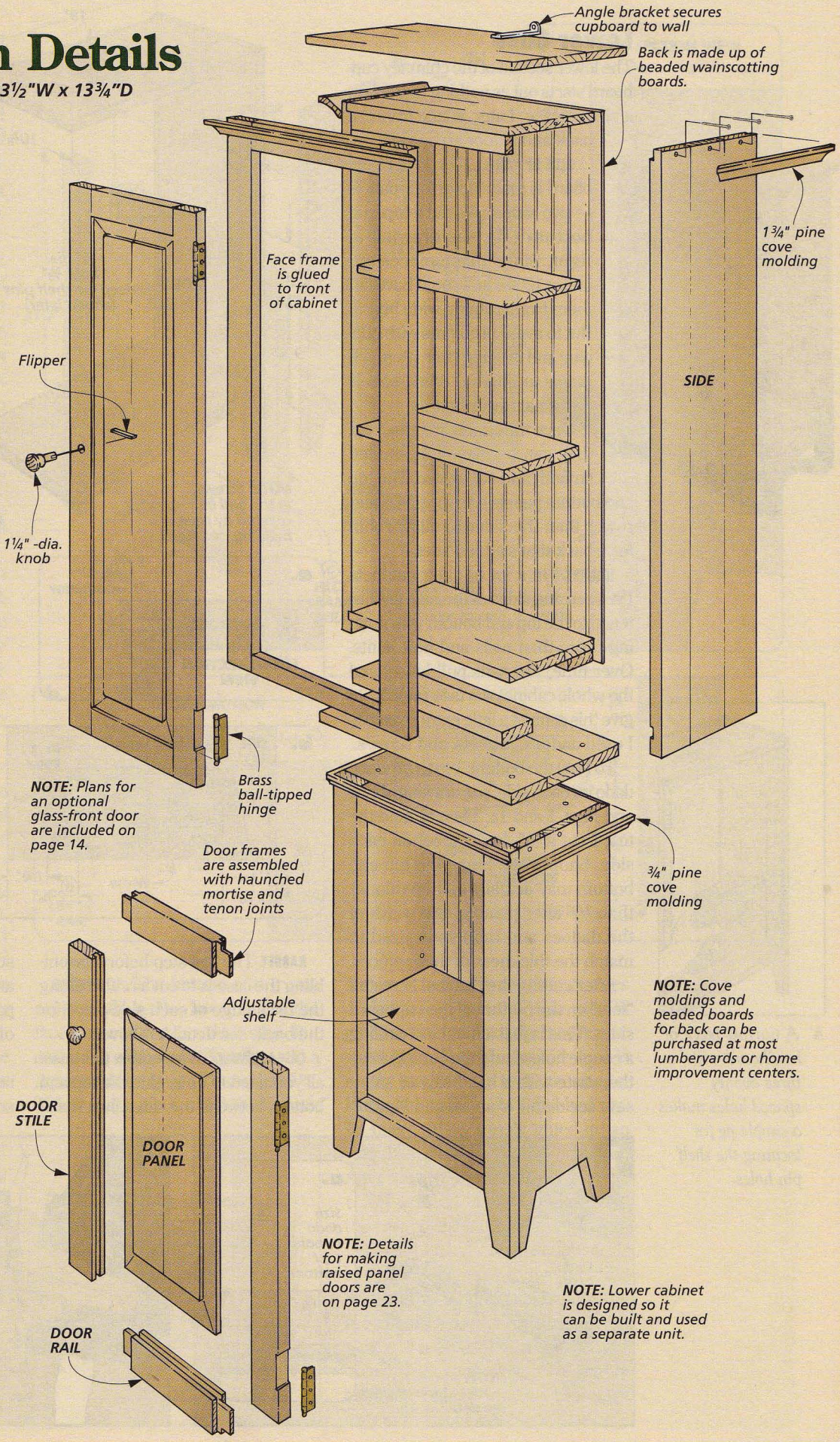

Lower Case

The lower section of the chimney cupboard starts out as nothing more than a simple case. Later, a face frame, a back and a door are added.

GLUE UP PANELS. The lower cupboard is made up of four panels — two **sides (A)** and a **top** and **bottom (B)**, see drawing at right. Since these pieces are under 12" wide, I could have cut them from a single wide board. But to avoid problems with cupping and twisting later, it's much better to glue up these panels out of narrower boards.

Once the panels are glued up, they can be planed or sanded smooth and cut to size. The top and bottom panels are ripped 3/8" narrower than the sides to allow room for a back that's added later.

JOINERY. On a lot of older cabinets I've seen, the sides of the case are fastened to the top and bottom with nothing more than nails and butt joints. Over time, the nails pull loose, and the whole cabinet starts to rack. So to give this cabinet a little extra strength, I used dadoes, rabbets, and screws.

To hold the bottom, I cut a 1/4"-deep dado on each side, see drawing above and Figs. 1 and 1a. Then to hold the top, I cut a 1/4"-deep rabbet on each side. Shop Note: Since the top and bottom may actually end up thinner than 3/4" after planing, the width of the dadoes and rabbets is sized to match the thickness of these pieces.

After cutting the dadoes, I created "feet" on the bottom of the cupboard sides. This is just a matter of drilling a couple holes and then cutting away the waste with a hand saw or sabre saw, see detail 'b' above and Fig. 2.

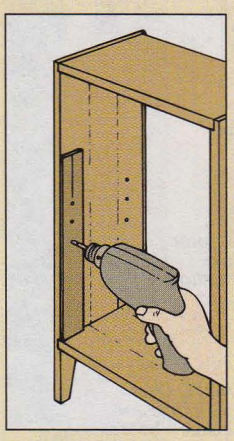

▲ *A narrow piece of hardboard with three evenly spaced holes makes a simple jig for locating the shelf pin holes.*

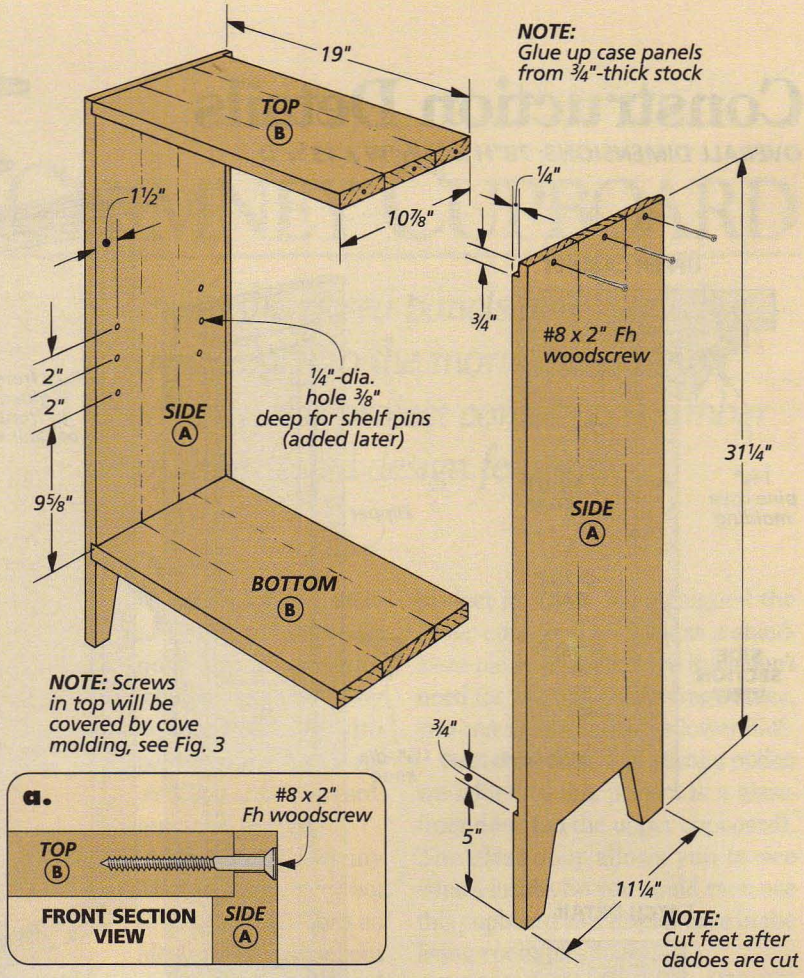

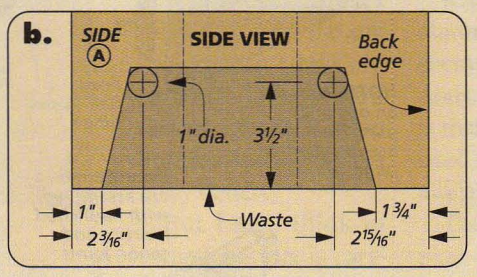

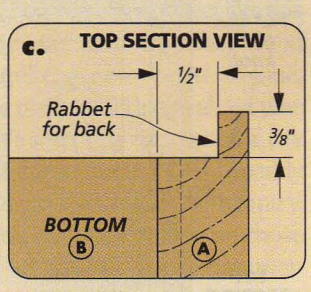

RABBET. The last step before assembling the case is to cut a rabbet along the back edge of each side piece for the back, see detail 'c' above.

CASE ASSEMBLY. To assemble this case, all you need to do is glue the top and bottom between the sides. Just make sure the front edges of all the pieces are flush — the sides will stick out past the top and bottom at the back of the case.

To strengthen the case, I also screwed the sides to the top panel, see detail 'a' above. Don't worry about

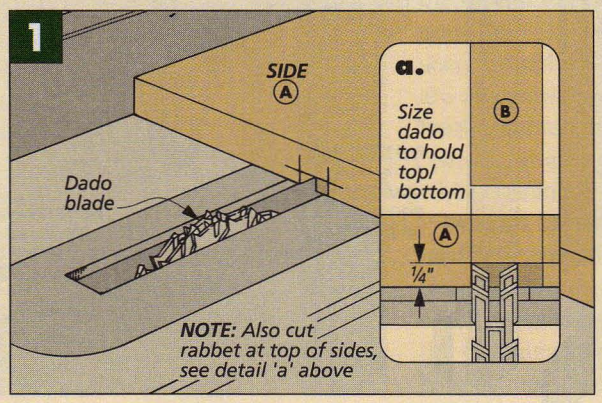

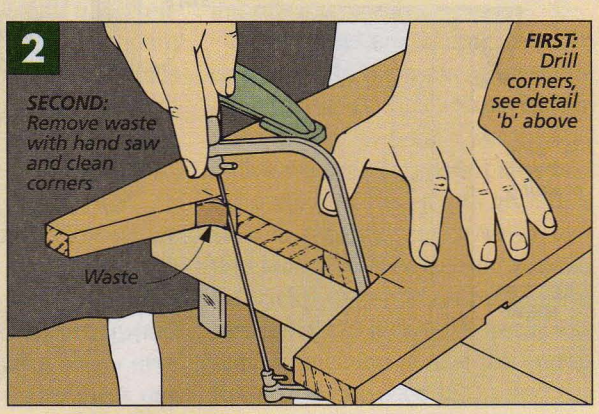

these screws being visible — they'll be covered up later with molding.

SHELF HOLES. Before moving on to making the face frame for the case, I drilled holes in the sides for the shelf pins. It's easier to do this before attaching the face frame, and a simple drilling jig makes spacing the holes a snap, see drawing in left margin.

FACE FRAME. The face frame is just that — a wood frame applied to the face of the cabinet to conceal the edges and provide an opening for the door. The first step in making the face frame is to cut the pieces to size from ¾"-thick stock. The frame is made up of two **stiles (C)** and an **upper (D)** and **lower rail (E)**, see drawing at right. I used mortise and tenons to join the frame pieces, see details 'b' and 'c'. (For more on mortise and tenon joints, see page 30.)

There are a couple things to watch for when laying out the joints for the face frame. First, the stiles of the face frame should end up flush with the sides. So pay attention to the shoulder-to-shoulder distance between the tenons since it determines the overall width of the face frame.

Second, the lower rail of the face frame should end up ¼" below the top edge of the bottom (B), see detail 'a'. This creates a stop for the door that's added later.

There's a small detail to tend to before the face frame can be glued up. The bottom of each stile is tapered to match the "feet" on the sides of the case, see detail 'c'. This taper ends at the bottom of the lower rail (4" up from the bottom, in my case).

Once the stiles are tapered, the face frame can be glued together and then glued to the front of the case.

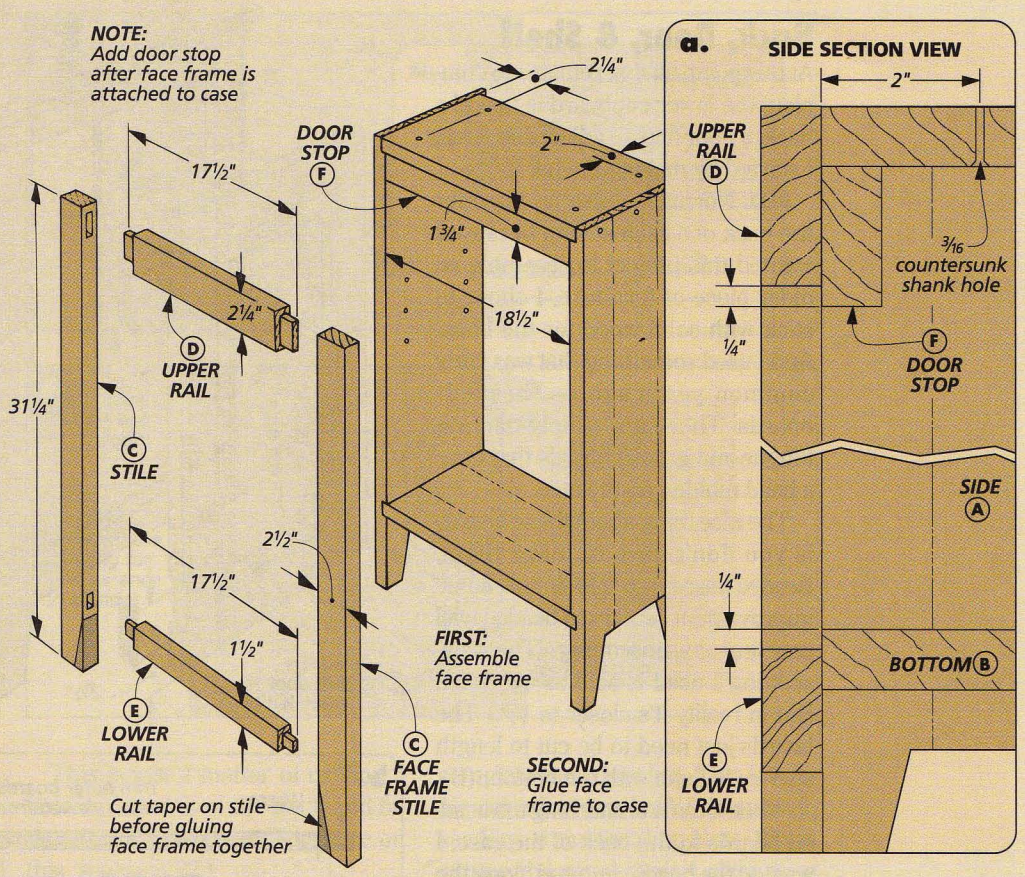

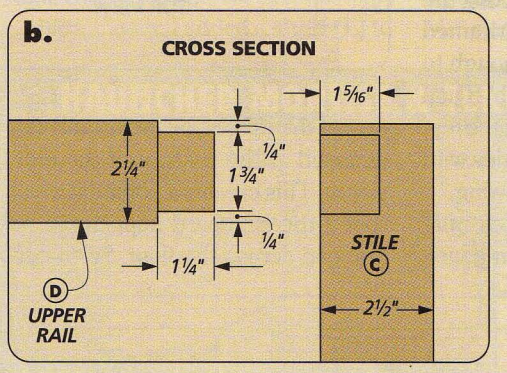

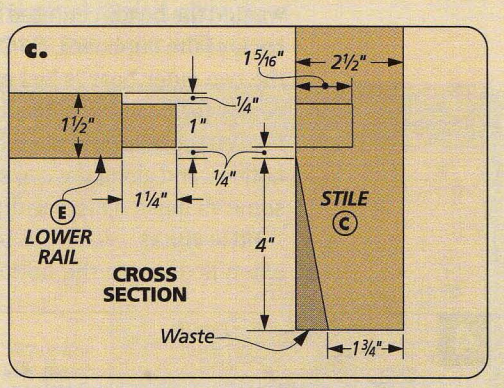

DOOR STOP. The bottom of the case projects above the lower rail of the face frame to create a door stop. But at the top of the case, I had to add a separate **door stop (F)**, see detail 'a'. This is just a piece of ¾"-thick stock that is cut to fit between the two sides of the case. Then the door stop is glued to the inside of the face frame.

TOP PANEL. At this point, the case is really beginning to take shape. However, it still lacks a finished top. To make this, I simply glued up an oversized panel of ¾"-thick material. After the **top panel (G)** is cut to size (12⅞" x 21¾"), it can be screwed to the case, see Figs. 3 and 3a.

Finally, to dress up the cupboard a bit, I added some ¾" cove molding around the top. After mitering the molding to length, it's attached with glue and nails. But to allow the cupboard sides to move with humidity changes, I glued the side moldings only at the front, see Fig 3.

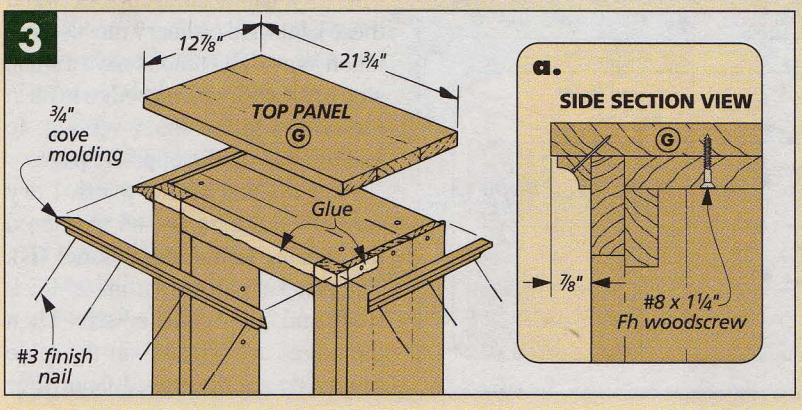

Back, Door, & Shelf

At this point, all that remains to complete the lower cupboard is to add a back, a door and an adjustable shelf. I started by making the back.

BACK. Normally, I use plywood for the back of a cabinet. But because I wanted this project to resemble an older piece of furniture, I chose to stick with solid wood for the back. And I used something that was fairly common years ago — "beaded" boards. These are simply narrow, tongue-and-groove boards that have a bead molded on the face.

The nice thing about these boards is you don't have to make them. Beaded boards are sold at most home improvement centers as beaded wall paneling or wainscotting. (The wainscotting I used is sold as 3/8" thick. But in reality it's closer to 1/4".) The boards just need to be cut to length so they fit flush with the bottom (B).

When it came to attaching the beaded boards to the back of the case, I wanted the beads centered along the back of the cupboard. So I trimmed the two outer boards just enough to center the beads, see detail 'b'. Then I nailed the boards in place at the top, bottom, and along the two sides with some #3 finish nails, see drawing.

FILLER BLOCKS. Since the back only extends down to the bottom panel, part of the rabbet for the back is left exposed at the bottom of the side pieces. This creates a potential weak spot if the cupboard happens to be dragged across the floor. So to correct this "Achilles' heel," I glued a **filler block (H)** into each of these rabbets, see detail 'a'.

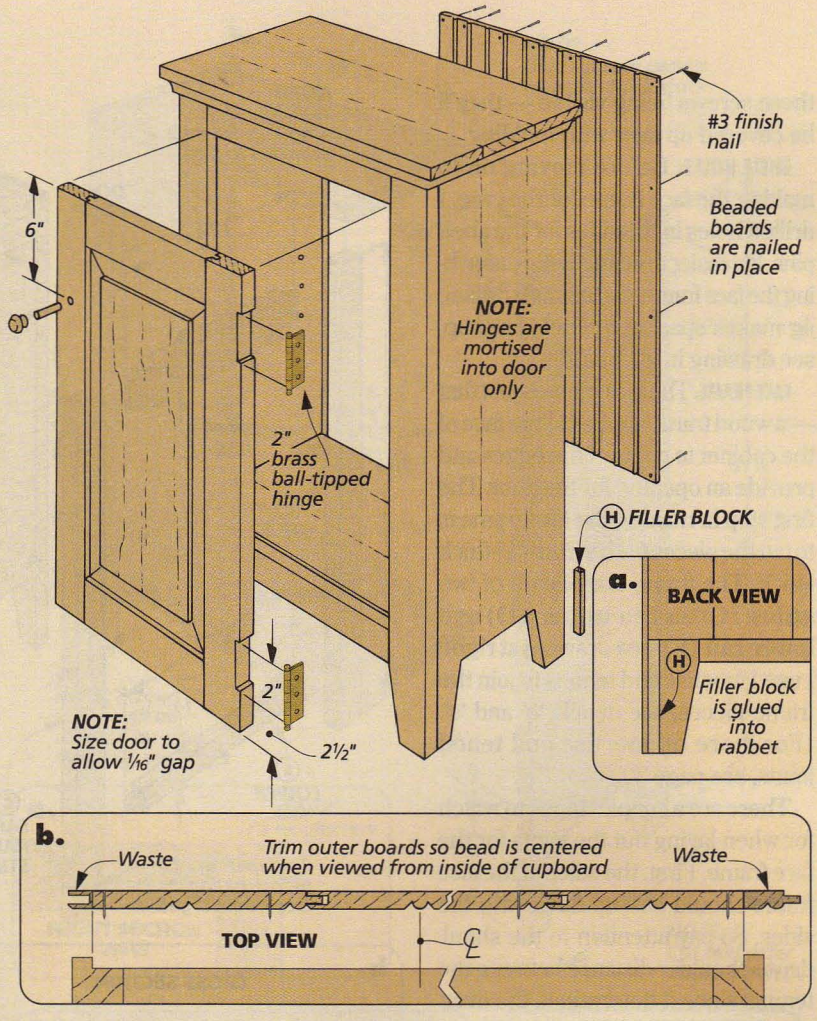

DOOR. At this point, I set the lower case aside and began working on the door. The door is made up of a frame that holds a raised panel.

To start off, I cut two **door rails (I)** and two **door stiles (J)** to size out of 3/4"-thick pine, see Fig. 4. Next, I cut a 1/4" wide, centered groove on the edge of each door piece to hold the raised panel, see Fig. 4b.

The door frame is assembled with haunched mortise and tenon joints. There's a slight difference between these joints and ordinary mortise and tenon joints. The tenons have a small step or shoulder on one edge to fill in the groove in the stiles, see Fig. 4c and the box on the opposite page.

After making all the joints, I dry assembled the frame and measured the opening for the **door panel (K)**. The panel is glued up from 1/2"-thick stock and cut to finished size. Then the edges are beveled on the table saw to create the raised field. (For

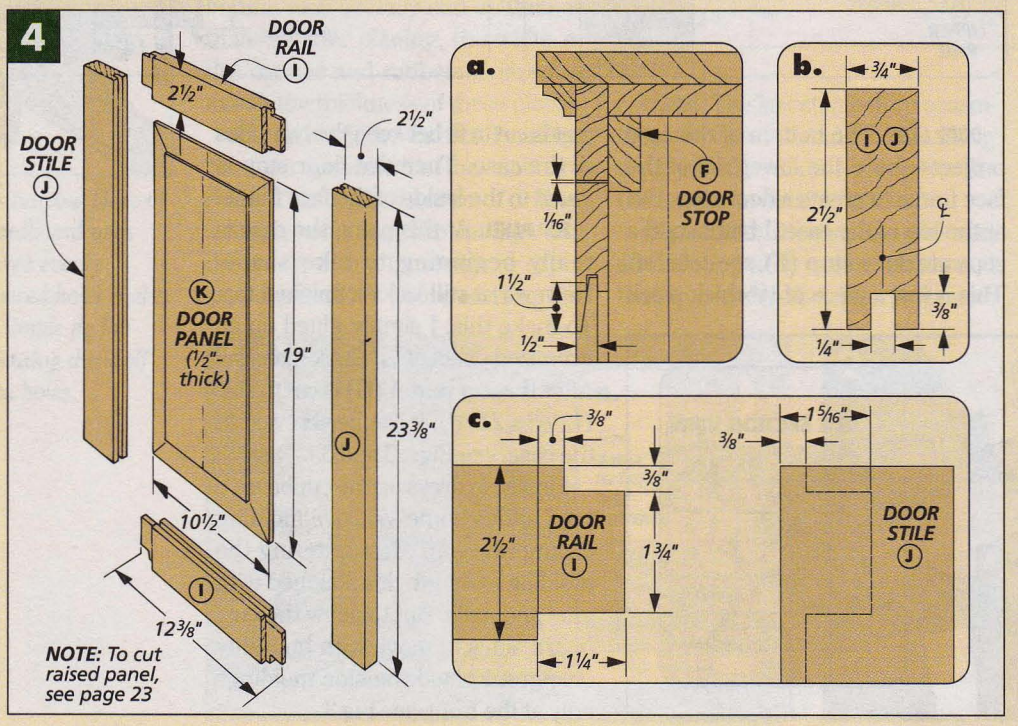

more on raised panels, see page 23.)

After the panel is completed, the door frame can be glued together. Just make sure you don't get any glue on the frame pieces around the panel opening; it's important that the panel isn't glued in place so it can expand with changes in humidity.

HARDWARE. When it came to choosing the hardware for this cupboard, I wanted something that wouldn't look out of place. So I used solid brass, ball-tipped butt hinges to mount the door to the cupboard.

Mounting these hinges is really pretty easy, especially since they're mortised into the door frame only. Then they're simply mounted to the inside edge of the face frame, see drawing on opposite page.

I decided to use a store-bought wood knob for the door. Finding the right one was easy; but settling on a method for keeping the door closed was a bit trickier. Magnetic or spring catches just didn't seem appropriate for this project. So I decided to make my own wood latch, see Fig. 5.

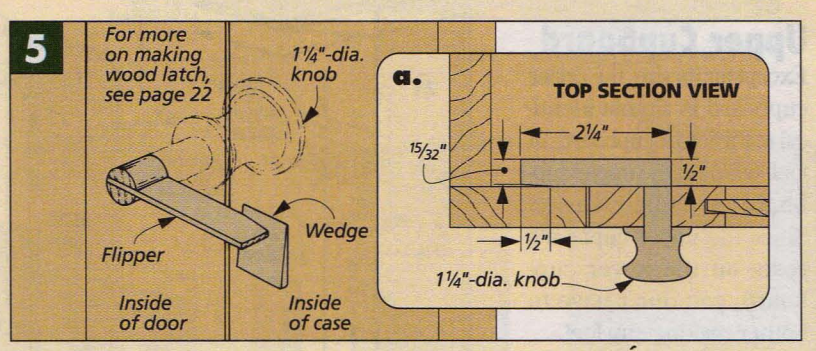

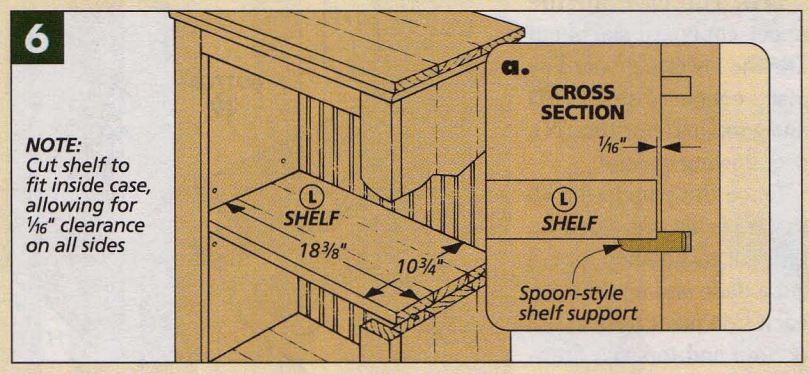

This is just a matter of drilling a hole in the back of the knob and fitting it with a "flipper." (For more on this, see page 22.)

SHELF. Finally, I added a **shelf (L)** to complete the cupboard. This is simply a glued-up panel of ¾"-thick stock, see Figs. 6 and 6a. Shop Note: When cutting the panel to size, allow for a 1/16" clearance gap around all edges.

HAUNCHED MORTISE & TENON

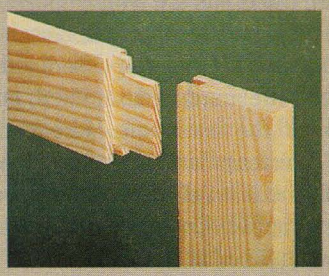

Cutting a groove along the inside edges of the rails and stiles of a door is a great way to hold a raised panel. But it also creates a slight problem.

Since the groove runs along the entire length of the stiles, you'd be left with a gap at each end of the stile *if* you used a regular mortise and tenon joint.

Instead, I use a *haunched* mortise and tenon. This is nothing more than a tenon with an extra little shoulder, or haunch, that fills in the end of the groove, see photo.

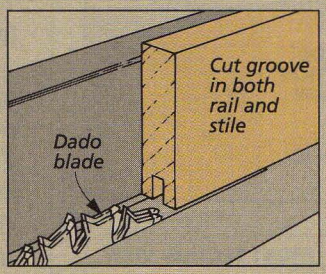

1 *Use a dado blade to cut a centered, ¼"-wide groove on the edge of each rail and stile of the door.*

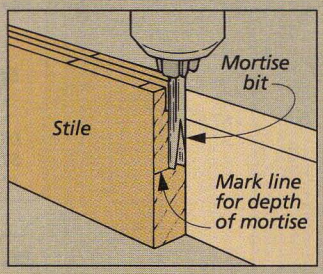

2 *After adjusting depth stop to set depth of mortise, drill out waste and clean up sides and ends with a chisel.*

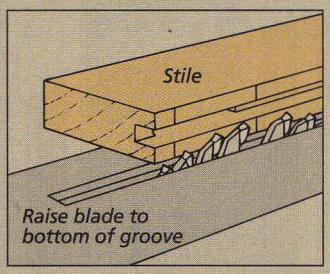

3 *To set blade height for making shoulder cut of tenon, raise blade to bottom of groove cut in door stile.*

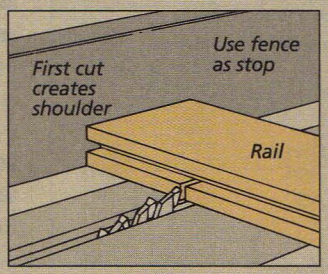

4 *To make shoulder cuts in rail, hold workpiece against miter gauge and use rip fence as a stop.*

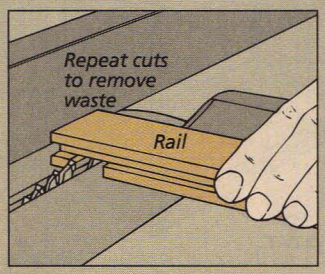

5 *Remove waste from cheeks of tenon by making a series of passes over the saw blade.*

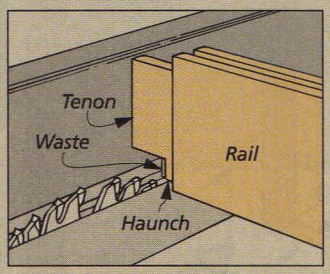

6 *To create haunch, raise blade and nibble away waste, starting at end. Sneak up on final length of haunch.*

Upper Cupboard

Except for its size, the upper cupboard is almost identical to the lower cupboard. In fact, building the upper cupboard is actually easier. Since the upper cupboard rests on the lower cupboard, you don't have to bother making any feet.

CASE. The case for the upper cupboard starts out like the lower cupboard — just a couple of **sides (M)** and a **top** and **bottom (N)**, see drawing at right.

Once the panels for all these pieces are glued up and cut to finished size, I cut a dado and a rabbet on each side piece to hold the bottom and top, see drawing and detail 'b'.

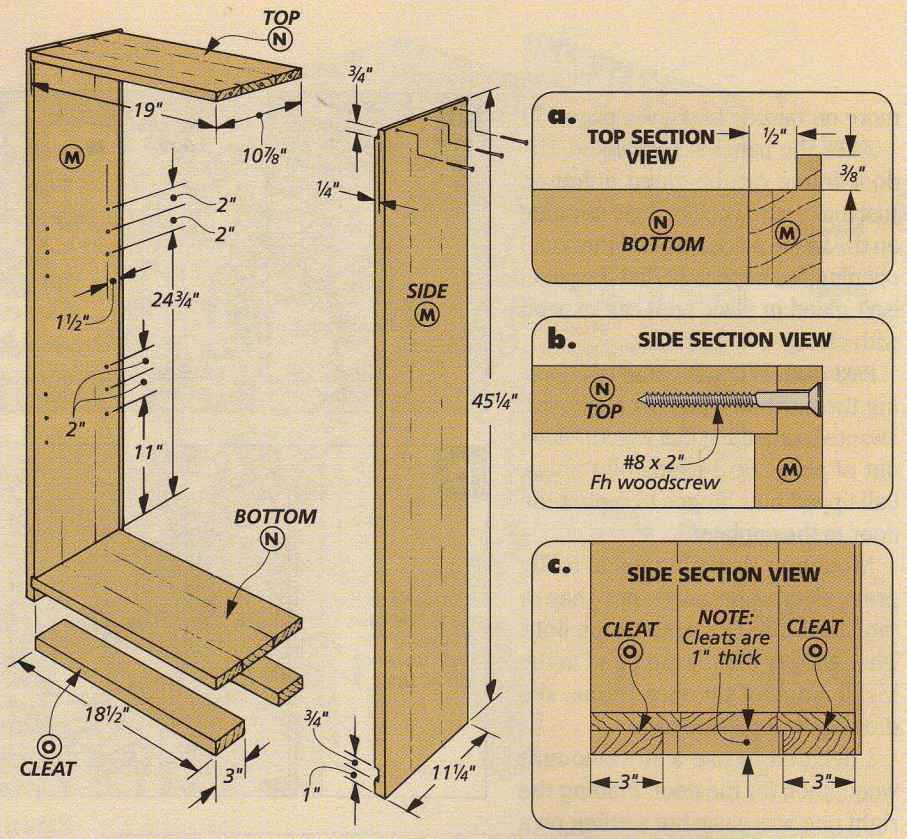

After cutting a rabbet on the back edge of each side for the back, the upper case can be glued together. Shop Note: I also screwed the sides to the top of case. Later these screws will be covered by molding.

DRILL HOLES. The upper cupboard is fitted with two adjustable shelves. So the next step is to drill four sets of ¼"-dia. holes for the shelf pins that will support the shelves, see drawing.

CLEATS. Later, the upper cupboard will be attached to the lower cupboard with screws. So in order to give the screws something to bite into, I added two **cleats (O)** to the bottom of the upper cupboard, see detail 'c'.

These cleats are 3" wide and are sized to fill in the space between the two cupboards. (I made mine 1"-thick.) Then the cleats are simply glued to the bottom of the upper cupboard.

FACE FRAME. Once the case for the upper cupboard is assembled, you can add the face frame. Here again, it's a rectangular frame that's sized to fit the front of the cupboard, see Figs. 7 and 7b. But this time, the stiles aren't tapered at the bottom.

Both frame **stiles (P)** are the same width (2½"). But the **upper rail (Q)** of the face frame is wider than the **lower rail (R)**. Once all four pieces are cut to finished size, the mortise and tenon joints can be made, and the face frame can be assembled.

DOOR STOP. After finishing the face frame and attaching it to the case, I added a **door stop (S)** at the top of the case, see Fig. 7a. This stop is glued to the back of the upper rail (Q).

CASE TOP & MOLDING. When it came to finishing off the top of the upper cupboard, I made a couple of changes. I wanted the top to stand out from the rest of the cupboard. To achieve this, I made the **top panel (T)** slightly

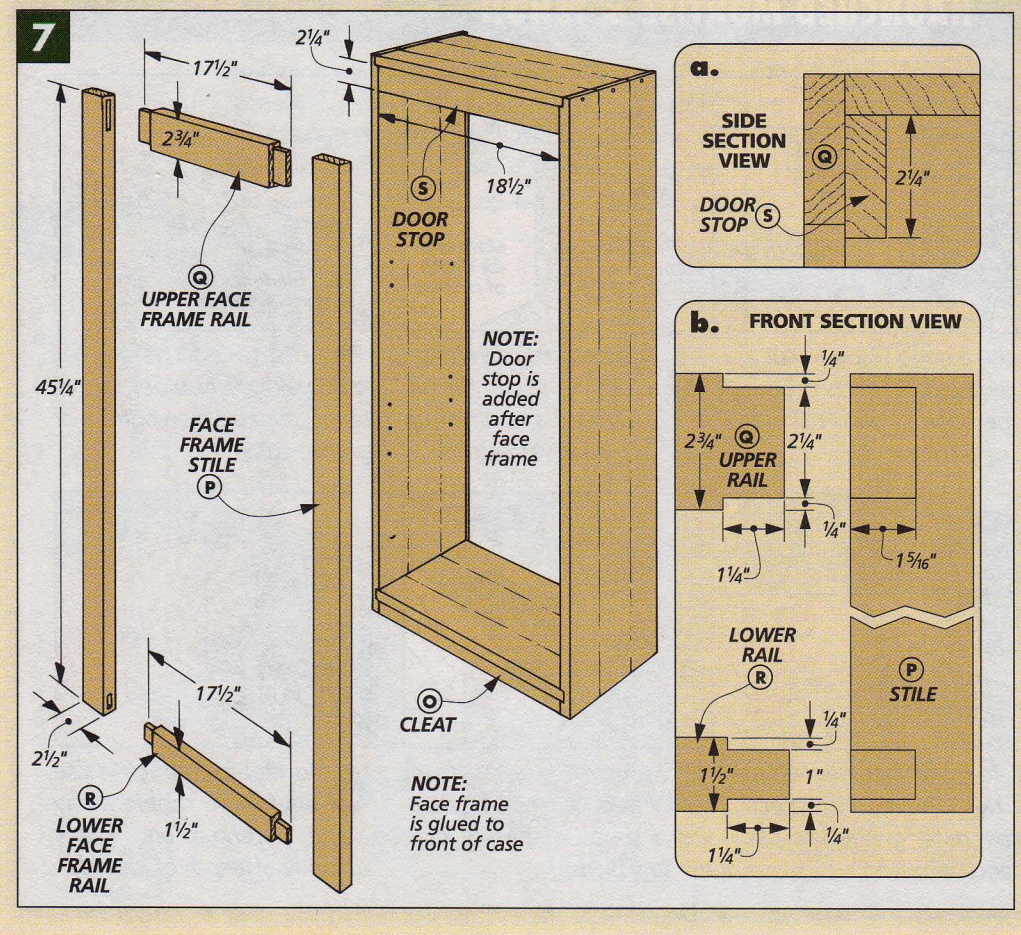

larger than the top panel used on the lower cupboard, see drawing at right. (It overhangs the cupboard 1¾" at the front and sides.)

Since this larger top created a wider overhang at the sides and front of the cupboard, I used a wider molding, see drawing and detail 'a'. (I used a commercially available, 1¾"-wide cove molding.)

I decided to attach the upper cupboard to the lower cupboard at this point since it creates a more convenient working height for installing the boards for the back and fitting the door.

Connecting the two cupboards is pretty easy. Just set the upper cupboard on top of the lower cupboard, centering it from side to side and making sure the two are flush at the back.

Then to connect the two cupboards, I drove screws up through the top of the lower cupboard and into the cleats and bottom of the upper cupboard, see detail 'a'. Shop Note: I clamped the two sections together while drilling the pilot holes for the screws.

BACK. With the upper cupboard attached to the lower cupboard, installing the back is a lot easier. After cutting the beaded boards to length and ripping the two outside boards to width, I nailed them in place. (Again, I used a single nail at the top and bottom of each board to allow the boards to expand and contract.)

DOOR. The only difference between the door on the upper cupboard and the door on the lower cupboard is the length of the stiles and the raised panel. (If you're making the optional glass door, see the next page.)

After cutting **door rails (U)** and **stiles (V)** to size, I cut grooves for the raised panel and made the haunched mortise and tenon joints.

Once the **door panel (W)** is glued up and beveled, the door can be assembled. Then the hinges are mounted, and the door is hung. Finally, the knob and latch are added.

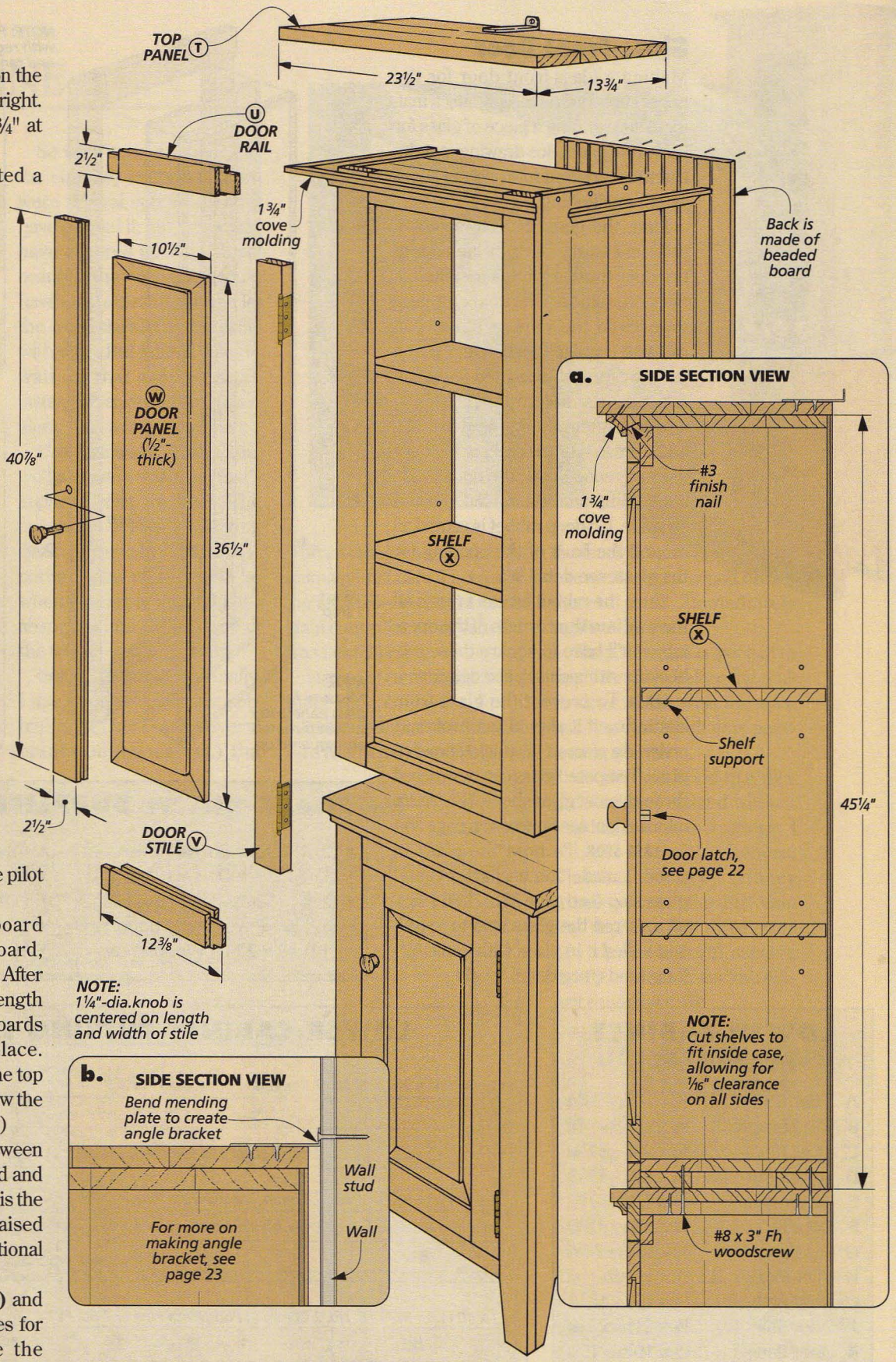

SHELVES. The last step to complete the cupboard is to make a couple **shelves (X)**. These are simply glued up as oversize blanks and then cut to fit inside the cupboard, see drawing.

ANCHOR. Because this chimney cupboard is so tall and narrow, I was a little worried about it tipping over. So after applying a finish (see page 15), I made an angle bracket out of a mending plate and secured the cupboard to the wall, see detail 'b' and page 23.

Glass-Front Door

Making a glass-front door for the upper cupboard is basically just a matter of substituting a piece of glass for the raised panel, see drawing at right. But there are a couple of differences worth mentioning.

First, the glass fits into a rabbet that's cut on the back, inside edge of the door frame *after* it's assembled. Second, since there aren't any grooves in the rails or stiles, you can use regular mortise and tenon joints instead of haunched tenons to assemble the door frame.

RABBET. After cutting the door rails and stiles to size and making the mortise and tenon joints, the door frame is glued up and assembled. Then a ⅜"-wide, ½"-deep rabbet is routed all around the back of the opening for the glass, see detail 'a'.

Since the rabbet bit can't reach all the way into the corners of the opening, you'll have to square these rabbets up with a chisel, see detail 'a'.

GLASS. To prevent the glass from shattering if it should get broken, I ordered a piece of ⅛"-thick tempered glass. Tempered glass can be ordered through most glass shops. (For more information, see Sources on page 35.)

GLASS STOP. To hold the glass in place, I made some quarter-round glass stop (see page 23). Then I simply mitered the glass stop to length and nailed it in place with some ⅝"-long brads, see detail 'b'. W

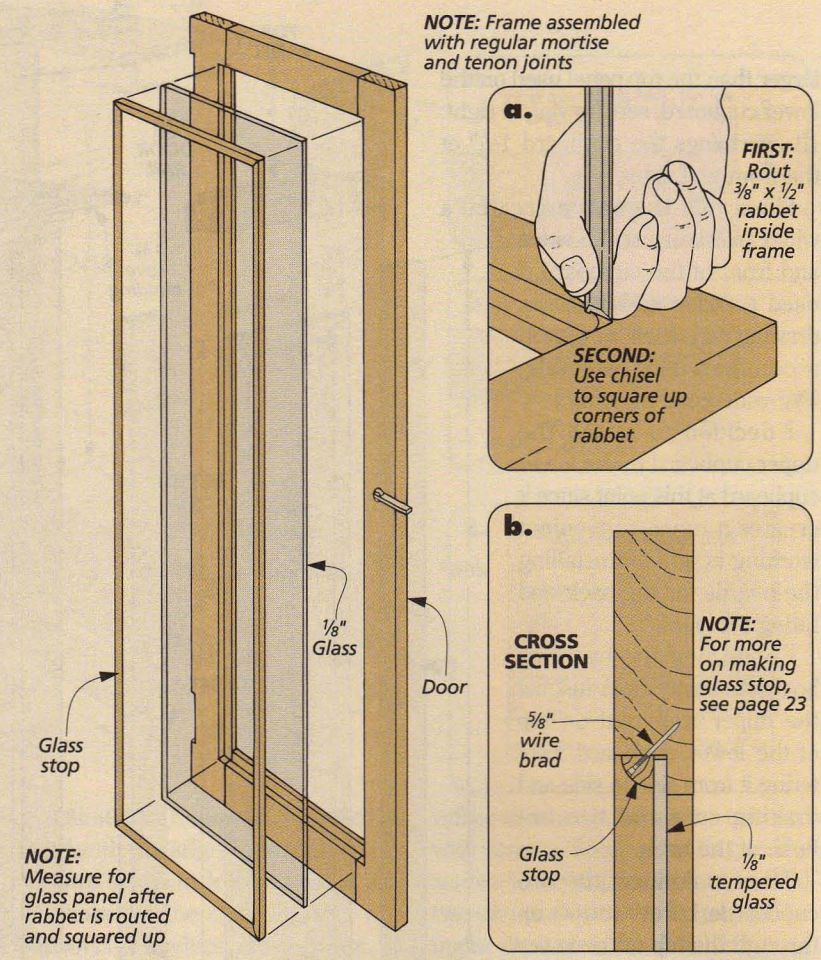

SUPPLIES

- (2) 1¼"-dia. Birch Knobs
- (1) ½" Birch Dowel (6"-long)
- (2 pr.) 2" Brass Ball-tipped Hinges
- (12) ¼" Brass Shelf Supports
- (12) #8 x 2" Fh Woodscrews
- (4) #8 x 1¼" Fh Woodscrews
- (4) #8 x 3" Fh Woodscrews
- (1) ⅝" x 4" Mending Plate
- #3 Finish Nails
- ⅝" Wire Brads (optional)

LOWER CABINET MATERIALS

A	Sides (2)	¾ x 11¼ - 31¼
B	Top/Bottom (2)	¾ x 10⅞ - 19
C	Stiles (2)	¾ x 2½ - 31¼
D	Upper Rail (1)	¾ x 2¼ - 17½
E	Lower Rail (1)	¾ x 1½ - 17½
F	Door Stop (1)	¾ x 1¾ - 18½*
G	Top Panel (1)	¾ x 12⅞ - 21¾
H	Filler Blocks (2)	⅜ x ½ - 5
I	Door Rails (2)	¾ x 2½ - 12⅜
J	Door Stiles (2)	¾ x 2½ - 23⅜
K	Door Panel (1)	½ x 10½ - 19
L	Shelf (1)	¾ x 10¾ - 18⅜

*Also Needed: Five linear feet of ¾" pine cove molding and ⅜"-thick beaded wainscotting for back

LOWER CABINET CUTTING DIAGRAM

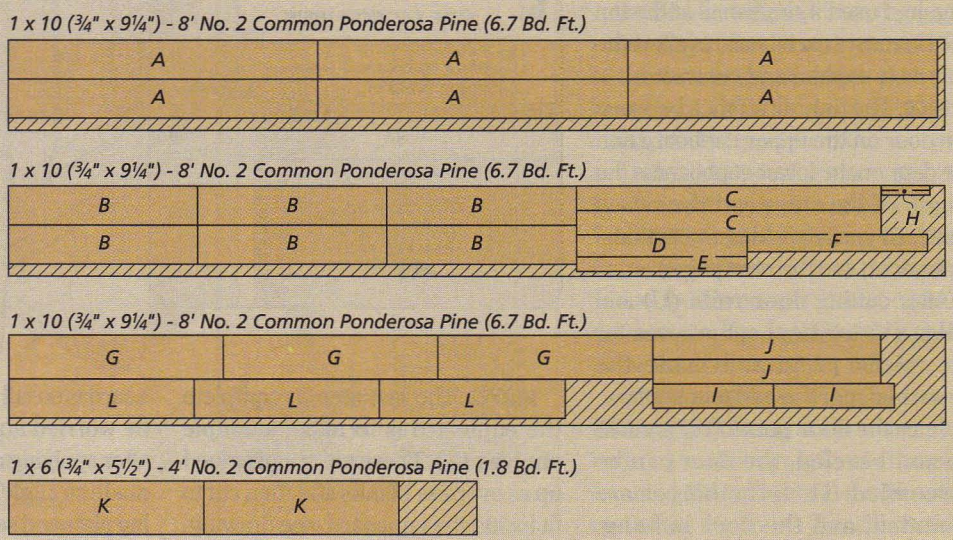

STAINING PINE

Like a lot of people, when I began woodworking, I used pine for nearly all my projects, and with good reason. Pine is readily available, not too expensive, and is easy to work with.

But when it comes to finishing, I've found pine to be one of the most troublesome of all woods. I still remember how my first few attempts at staining pine left the wood looking blotchy and muddy.

It wasn't until much later that I learned why this was so. It has to do with the nature of the wood itself. Pine, like most softwoods, is made up of alternating layers of small, dense pores and large, open pores.

OPEN PORES. So when you stain pine, the areas with large pores soak up a lot more of the stain than the areas with small pores. The result is a blotchy finish.

So what's the solution? For the chimney cupboard, there were several options. I could have painted it, but this would have covered up the natural beauty of the wood. I also could have used a clear finish and let the wood darken and mellow with time. But I didn't want to wait for that aged look. So instead, I decided to use a stain along with a stain controller.

STAIN CONTROLLER. A stain controller is just a washcoat that's applied before the stain. The controller "levels the playing field" by partially filling in the porous areas of the wood. So when you apply the stain, it's absorbed into the surface of the wood more uniformly.

CHIMNEY CUPBOARD. Normally, I use a commercial stain controller. (There are several brands on the market.) But when it came time to finish the chimney cupboard, I got a sinking feeling as I took the can of stain controller off my shelf. It was nearly empty.

Instead of running out to buy more stain controller, I tried something different. I brushed on a coat of a General Finishes' Sealacell (Clear). After waiting a few minutes, I wiped off the excess and immediately applied the stain.

Shop Note: It's important to apply the stain before the sealer dries. Otherwise the stain will have a difficult time penetrating the wood.

To give the wood that nice golden hue I wanted without making it look too orange, I stained it with General Finishes' Sealacell (Honey Maple). Then after the stain was dry, I applied three coats of a wipe-on oil finish, sanding lightly between coats with 400-grit sandpaper. W

UPPER CABINET CUTTING DIAGRAM

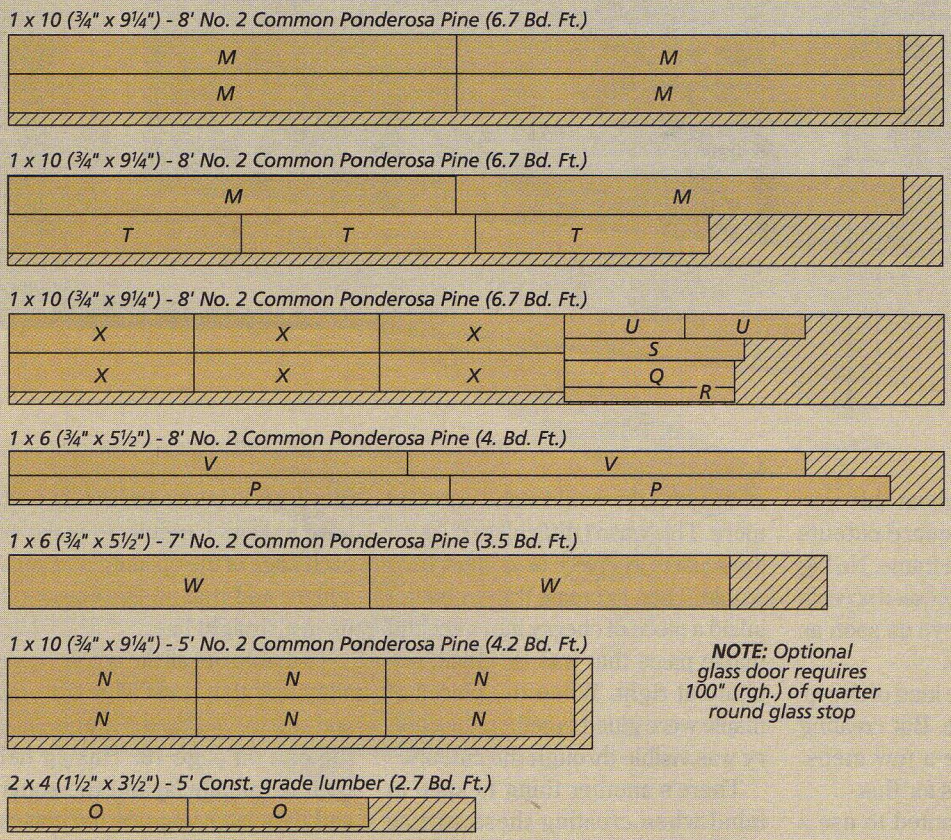

NOTE: Optional glass door requires 100" (rgh.) of quarter round glass stop

UPPER CABINET MATERIALS

M	Sides (2)	¾ x 11¼ - 45¼
N	Top/Bottom (2)	¾ x 10⅞ - 19
O	Cleats (2)	1 x 3 - 18½
P	Stiles (2)	¾ x 2½ - 45¼
Q	Upper Rail (1)	¾ x 2¾ - 17½
R	Lower Rail (1)	¾ x 1½ - 17½
S	Door Stop (1)	¾ x 2¼ - 18½
T	Top Panel (1)	¾ x 13¾ - 23½
U	Door Rails (2)	¾ x 2½ - 12⅜
V	Door Stiles (2)	¾ x 2½ - 40⅞
W	Door Panel (1)	½ x 10½ - 36½
X	Adj. Shelves (2)	¾ x 10¾ - 18⅜

*Also Needed: Five linear feet of 1¾" pine cove molding and ⅜"-thick beaded wainscotting for back

WEEKEND PROJECT

HALL MIRROR

With its geometric accents and gentle curve, the top rail adds a bit of elegance to a rather simple mirror frame. The trick was figuring out how to let the contrasting cherry show through the five square cutouts.

What I really like about this mirror are the five square cutouts along the top rail of the frame. No big surprise here. These recessed accents are what catch your eye as soon as you look at the mirror.

But these details are kind of deceptive. They look simple. But creating them requires quite a few steps. There are two reasons for this.

For one thing, I wanted to use a contrasting wood behind the cutouts so the squares would stand out even more. This wasn't difficult to do. I cut the squares in a piece of ¼"-thick hard maple. Then to create the contrast, I inlaid a piece of cherry into a second maple piece that was ½" thick, see photo at right. When the pieces of maple were glued together, the cherry was visible through the cutouts.

There's another thing to keep in mind when creating these square accents. Because they're identical, they have to be cut accurately. So you have to work carefully to make sure each edge of the opening is clean and square and that all five cutouts line up in a straight line.

To make sure all the accent squares align and that their edges are crisp and square, we used a simple jig, see the box on page 18. This jig helps both to initially lay out the squares and then later to guide the chisel as you clean up the edges.

Construction Details

OVERALL DIMENSIONS: 26"H x 37½"W x 2"D

TOP RAIL DETAIL

FILLER

Accent squares cut in face

FACE

BACK

TOP CAP

Turn button

Hanger

Top rail assembly

STILE

⅛" mirror

Reflection of rabbet on back of frame

Corrugated cardboard backing

BOTTOM RAIL

BOTTOM CAP

½" chamfer

Top and bottom caps cut from oversize blank

CROSS SECTION

TOP CAP

Hanger

½" chamfer

Top rail assembly

Turn button

⅛" mirror

STILE

⅛" corrugated cardboard backing

⅛" roundover

¼" chamfer

1"-thick stiles stand proud of ¾"-thick rails

BOTTOM CAP

▲ *To create the cherry background for the square cutouts, the top rail starts out as three pieces — a face, back, and filler.*

Frame

With most frames, I work on the rails and stiles all at once, see drawing on opposite page. But the top rail is the trickiest part of the mirror, so I started with it first, see drawing at right.

TOP RAIL. What I wanted was a top rail with five shallow cutouts *and* with some cherry in the background of the square cutouts for contrast. To get there, I decided to build the rail in three layers: a 1/4"-thick maple face, a 1/2"-thick maple back, and a 1/4"-thick cherry filler, see drawing. Later, these three pieces will be glued together. But for now, I worked on just the face piece and its accent squares.

TOP RAIL FACE. The first thing to do with the **top rail face (A)** is to cut it to final size (4 1/4" x 32 1/2"), see drawing. Then I laid out the centerlines of each of the five squares, see detail 'a' at right. (The middle square is centered along the length of the piece.)

ACCENT SQUARES. The accent squares are 1 1/2" in height and width. To make these squares identical, I used a simple jig, see photo in box below. It's basically just a board with a square opening and a lip. But instead of cutting out the square opening, I created the jig by gluing five separate pieces together, see page 22.

Once the jig is built, creating the squares is a simple three-step process, see box below.

TOP RAIL BACK & FILLER. With the accent squares completed, I set the face piece aside and worked on the **top rail back (B)**. This piece is cut from 1/2"-thick stock, and it's the same size as the face piece (4 1/4" x 32 1/2"), see drawing.

Next, I cut a 1/4"-deep groove 1 3/4" wide in the *front* face of the back (B), see detail 'b' above. (It starts 3/8" from the top edge.) This groove is filled by the 1/4"-thick cherry **top rail filler (C)** that's cut to fit into the groove.

TOP RAIL LAMINATION. With the filler strip glued in place, the face (A) and back (B) pieces can be glued together, see Fig. 1. The trick here is mak-

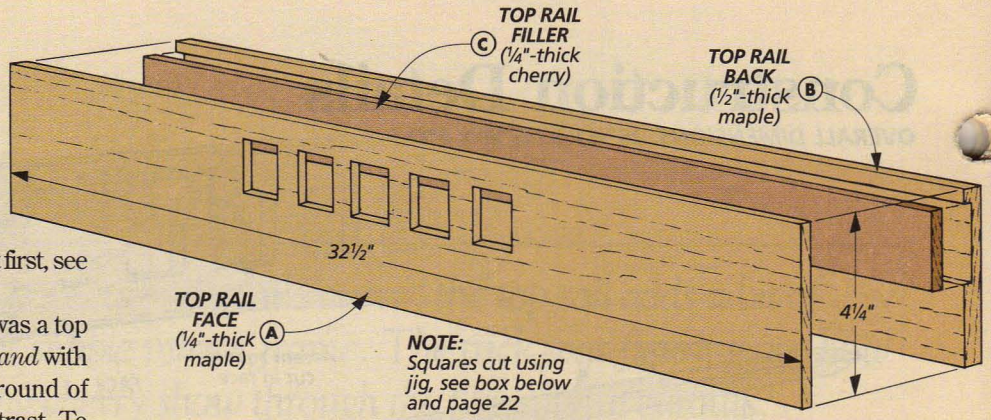

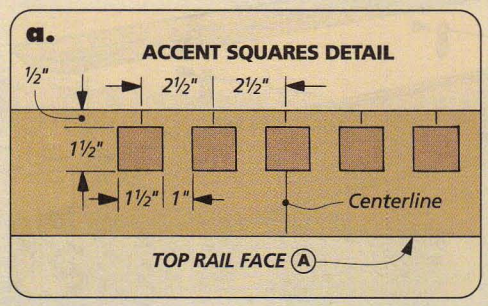

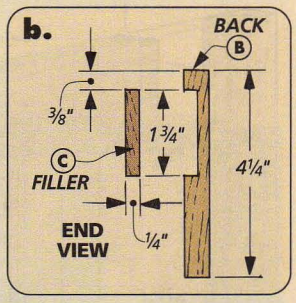

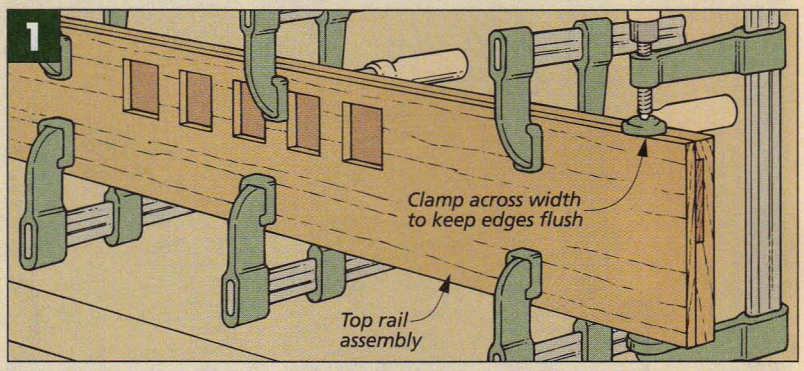

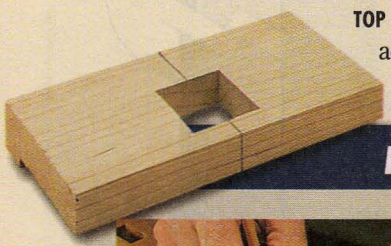

MAKING ACCENT SQUARES IN LAMINATED MIRROR RAIL

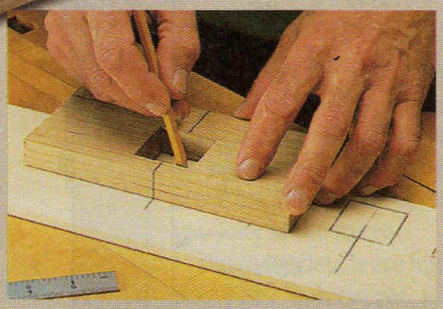

1 *First, mark the centers of the squares, see detail 'a' above. Then with the jig (page 22), lay out the squares on the piece.*

2 *Now, remove most of the waste for each square by drilling overlapping holes with a Forstner bit.*

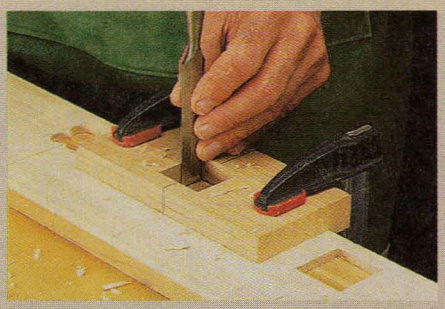

3 *Clamp the layout jig back over the squares and carefully remove the rest of the waste with a sharp chisel.*

ing sure the two pieces end up flush as you're gluing them together — especially since the pieces have already been cut to finished size. To help with this, I placed a clamp across the width of the rail at each end.

At this point, the top rail still needs tenons. But I don't like cutting tenons until the mortises are complete. So I set the top rail aside to work on the other three frame pieces, see drawing at right.

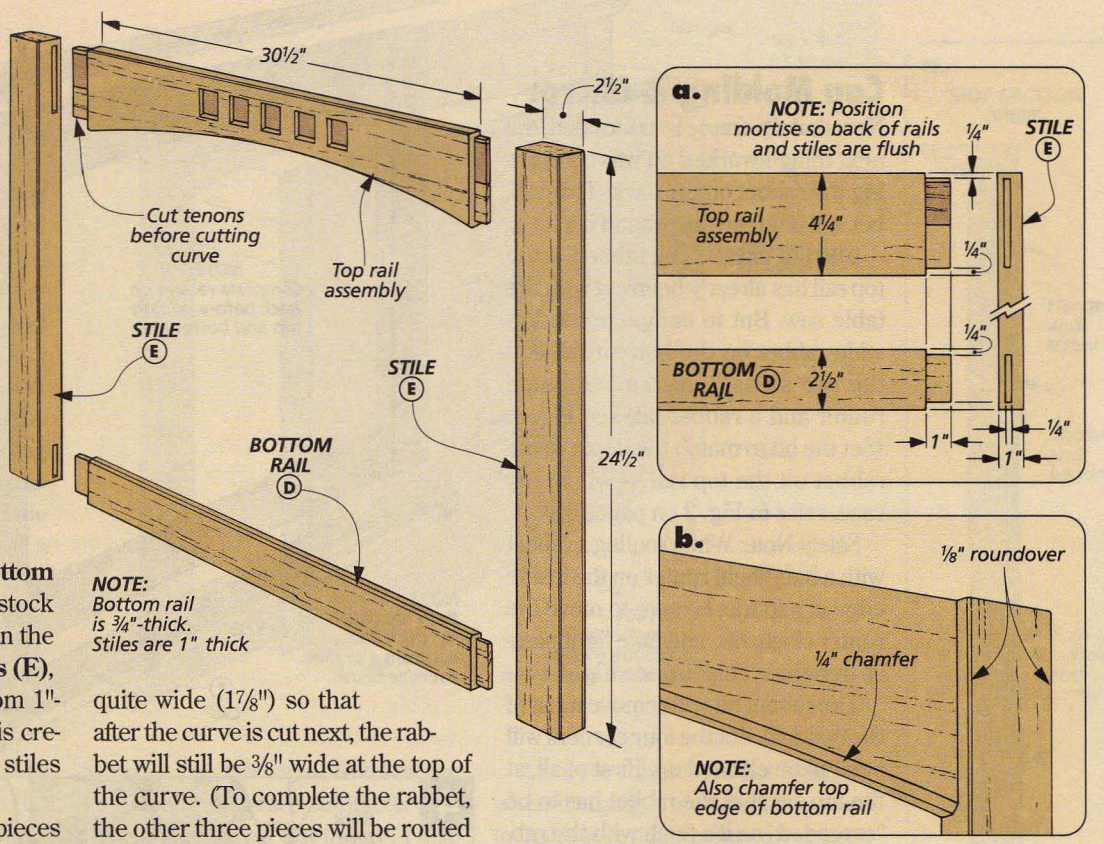

BOTTOM RAIL & STILES. The **bottom rail (D)** is cut from ¾"-thick stock and is quite a bit narrower than the top rail (2½" x 32½"). The **stiles (E)**, on the other hand, are cut from 1"-thick stock (2½" x 24½"). This creates a shoulder between the stiles and rail, see detail 'b' at right.

MORTISES & TENONS. With the pieces cut to size, I cut the mortises in the stiles and the tenons on the rails, see detail 'a' at right. The thing to keep in mind here is that because the stiles are thicker than the rails, the mortises are offset slightly. And because they aren't centered, you need to lay them out so the pieces "mirror" each other. (For more on mortise and tenon joints, see page 30.)

TOP RAIL RABBET. After the mortise and tenon joints have been cut, I set the bottom rail and the stiles aside for a moment and turned my attention to creating a rabbet on the back inside edge of the top rail, see Fig. 2. This rabbet will hold the mirror, and it's quite wide (1⅞") so that after the curve is cut next, the rabbet will still be ⅜" wide at the top of the curve. (To complete the rabbet, the other three pieces will be routed after the frame is assembled later.)

To cut this rabbet, I stood the piece on edge and made a couple passes over the table saw blade, moving the fence between passes, see Fig. 2. What you want is a rabbet that will match the thickness of a ⅛"-thick mirror *plus* a piece of backing material (a piece of ⅛"-thick cardboard). In my case, the rabbet was ¼" deep.

TOP RAIL CURVE. The next thing to do is cut the gentle curve along the bottom edge of the top rail, see drawing above. To lay out this curve, I clamped a scrap block at each end of the rail so I could push a strip of hardboard against them and draw the curve, see Fig. 3. Then I cut it out on the band saw, staying about 1/16" from the layout line. And finally, I sanded up to the line with a drum sander chucked up in the drill press.

EDGE TREATMENT. After the curve is cut in the top rail, there are two more things to do before the frame can be assembled. First, I routed a ¼" chamfer along the inside edges of the top and bottom rails, see detail 'b' above. Then I routed a ⅛" roundover along the front edges of the stiles.

MIRROR FRAME ASSEMBLY. Now that all the pieces are complete, the frame can be glued together.

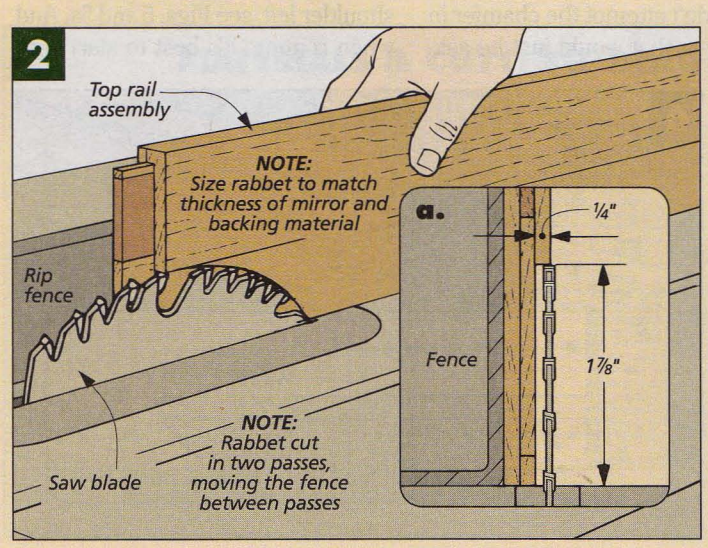

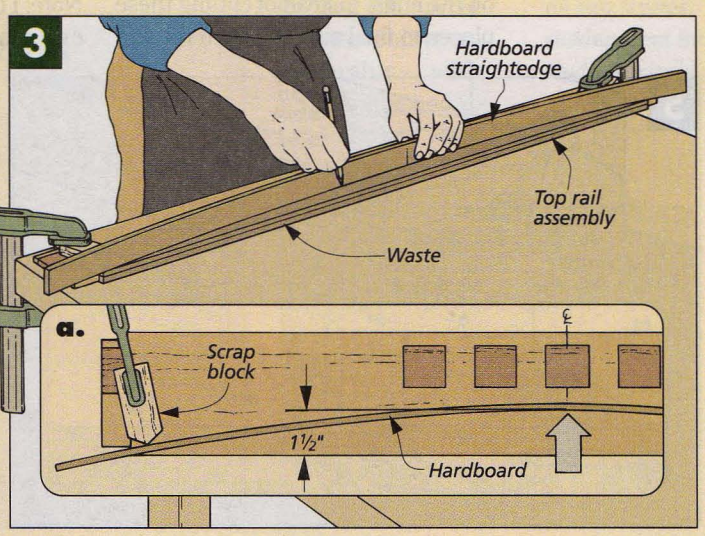

Cap Molding & Mirror

Now that the frame is assembled, the next thing I worked on was completing the rabbet on the back. This rabbet will hold the mirror and backing.

COMPLETE RABBET. The rabbet on the top rail has already been cut with the table saw. But to complete the 3/8"-wide rabbet on the bottom rail and the two stiles, I used a hand-held router and a rabbet bit, see Fig. 4. (Set the bit to match the depth of the rabbet on the top rail — 1/4" in my case, refer to Fig. 2 on page 19.)

Safety Note: When routing a rabbet with a hand-held router on the inside edge of a frame, be sure to move the router clockwise and take light passes to reduce chipout, see Fig. 4.

The rabbet bit will remove most of the material, but the four corners will need to be cleaned up. First of all, at the top corners the rabbet has to be "extended" so it's flush with the rabbets on the sides, see Fig. 4a. To do this, I laid out the final corner of the rabbet with a straightedge and scored it with a utility knife. Then I pared away the waste with a sharp chisel.

The rabbet bit can't cut a square corner at the bottom either. So when the top corners are complete, the bottom corners need to be squared up too, see Fig. 4b.

ADD CAP MOLDING. The last step before installing the mirror is to add cap molding to the top and bottom of the frame, see drawing above.

The chamfered molding on the top and bottom is identical. And there's a trick you can use to minimize chipout on the ends. Instead of cutting these pieces to final size and then routing the chamfer, start with a single oversize blank (4 1/2" x 37 1/2"). Then rout the chamfer on the blank, see Fig. 5. Note: I didn't attempt the chamfer in one pass — that would just be asking for chipout. Instead, I routed it in multiple passes, raising the bit between passes until there was a 1/4" shoulder left, see Figs. 5 and 5a. And when routing, it's best to start with

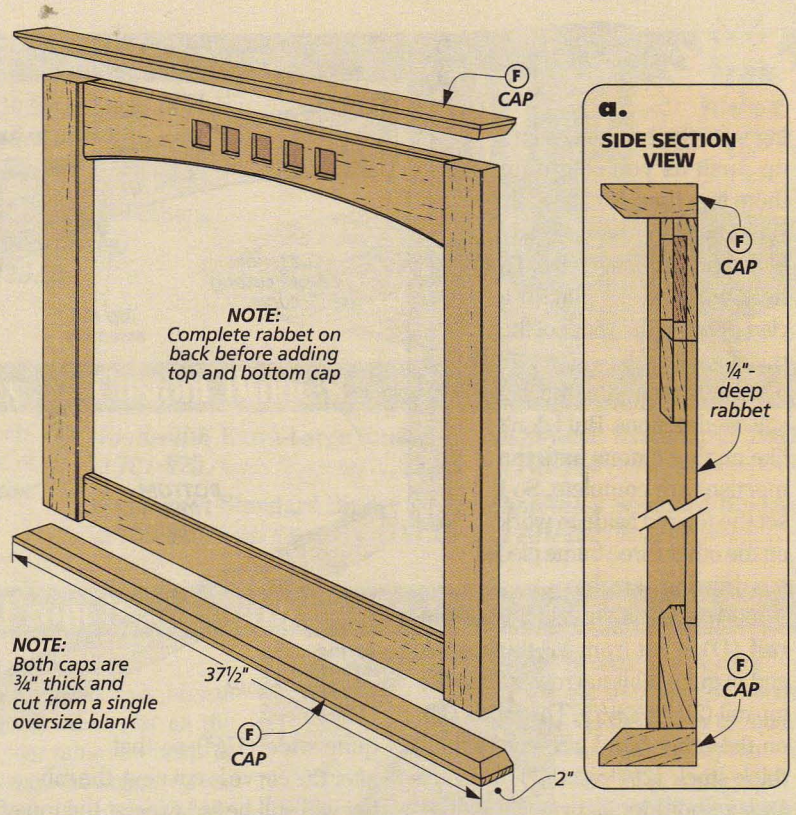

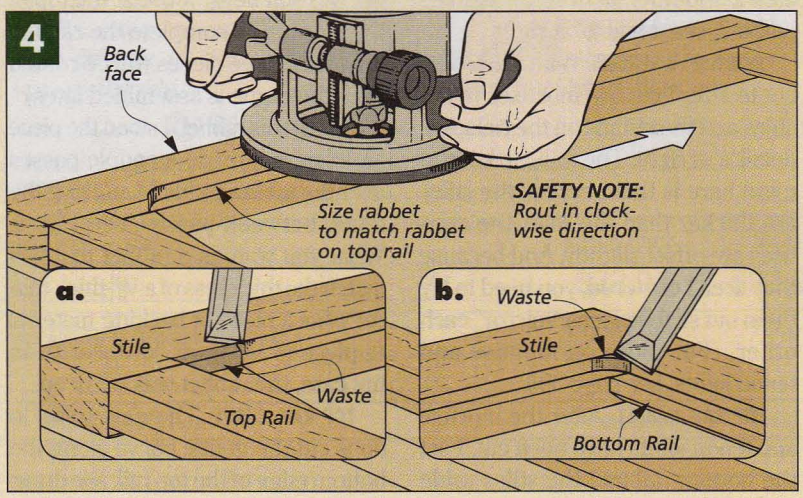

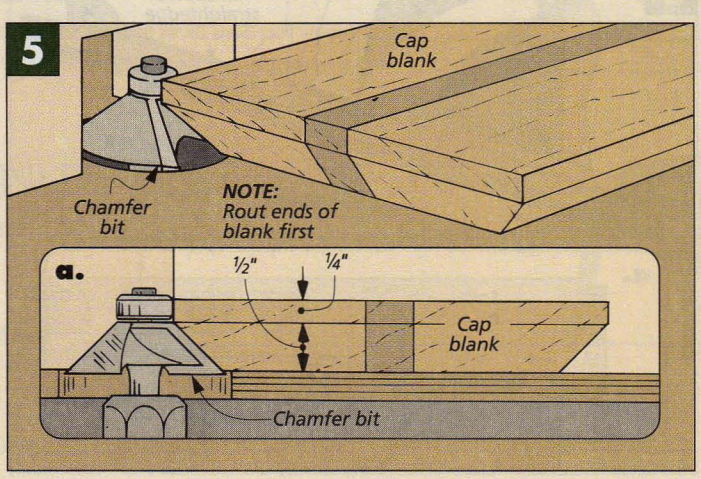

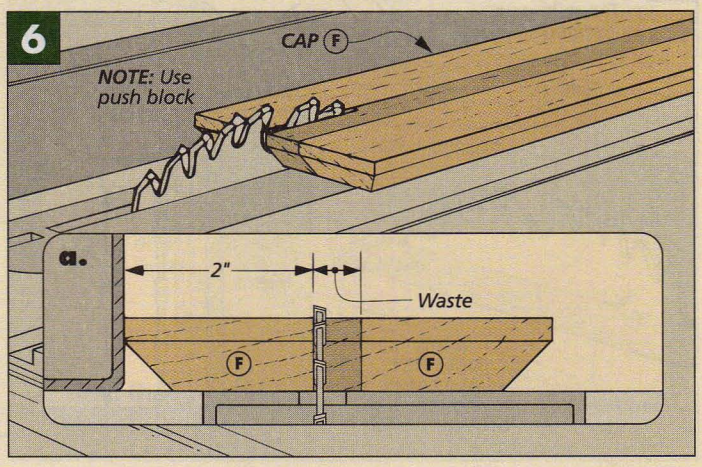

the ends. This way, any chipout on the ends will be removed when you rout the long edges of the blank.

With the chamfers routed, the **top** and **bottom caps (F)** can be ripped to width (2"), see Figs. 6 and 6a. Then they can be glued to the frame. These caps are centered side-to-side. And they're flush with the back of the frame, see detail 'a' on opposite page.

APPLYING A FINISH. At this point, the mirror is complete. But before adding the mirror and the hardware for hanging the mirror, I carefully sanded the mirror and applied a finish. This is a perfect project for a wipe-on finish. Getting the finish into the accent squares — and wiping it out — is easy. (You can either use three or more coats of an oil finish or a couple coats of a thinned-down varnish.)

INSTALLATION. Now all that's left is to install the mirror and hang it on the wall, see drawing at right. I used a ⅛"-thick mirror. And I had it cut ⅛" smaller than the height and width of the rabbet opening in back. (My mirror ended up 19⅞" x 31⅛".)

Shop Note: It's a good idea to wait to order the mirror until *after* the frame and rabbet are complete.

With the mirror cut to size, I also cut a backing from a piece of cardboard, see drawing. (Mine was about ⅛" thick.) Then I added ten turn buttons to the frame to hold the mirror and backing piece in place.

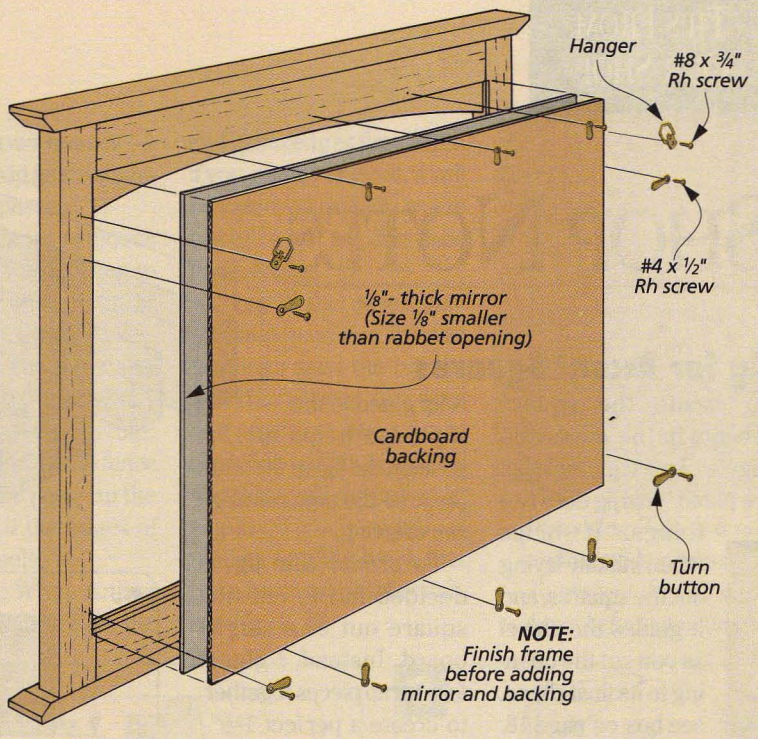

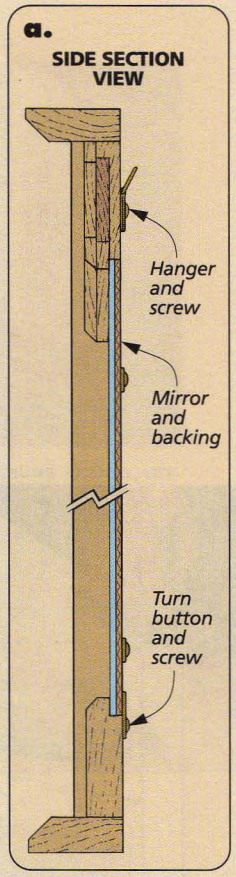

A mirror this size is not light. So when hanging it on a wall, you want to make sure it has plenty of support. I screwed two "D-bracket" hangers to the back. Then to add the wire, I used a special knot I learned from a friend of mine who had worked in a framing shop, see Fig. 7.

To create this knot, I feed the wire through the bracket and back around behind itself, see Fig. 7. Then it is fed through the bracket again and out through the loop. Now the remaining wire can be wrapped around itself. Another tip I learned was to wrap some tape around the ends of the wire so it won't scratch the wall.

After the wire has been attached to the brackets, the frame can be hung on the wall. Here, I would caution you to hang the mirror on two points — preferably with screws attached to two studs, see photo in margin. W

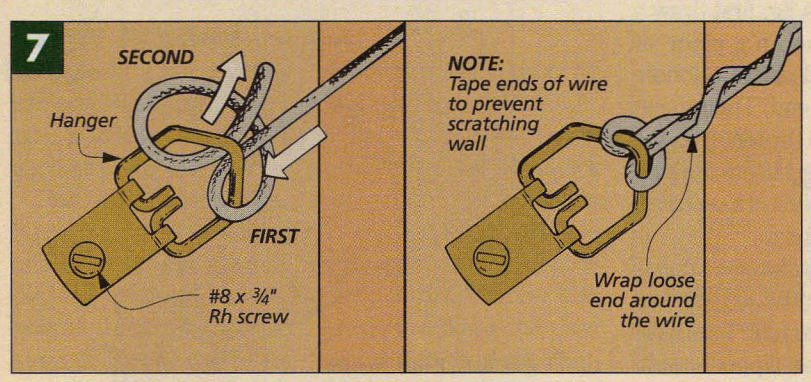

▲ *A mirror this hefty requires plenty of support, so hang it on two screws, sinking them into studs, if possible.*

MATERIALS & CUTTING DIAGRAM

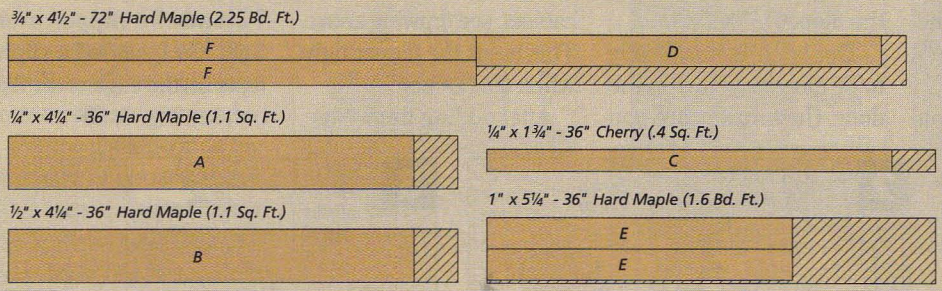

A	Top Rail Face (1)	¼ x 4¼ - 32½	**D**	Bottom Rail (1)	¾ x 2½ - 32½
B	Top Rail Back (1)	½ x 4¼ - 32½	**E**	Stiles (2)	1 x 2½ - 24½
C	Top Rail Filler (1)	¼ x 1¾ - 32½	**F**	Top/Btm. Caps (2)	¾ x 2 - 37½

SUPPLIES

- (2) Hangers
- (10) Turn Buttons
- (1) Picture Wire (5 ft.)
- (1) ⅛" Mirror (19⅞" x 31⅛")
- (1) Cardboard Backing
- (10) #4 x ½" Rh Woodscrews
- (2) #8 x ¾" Rh Woodscrews

SHOP NOTES

Jig for Accent Squares

To create the square accents in the mirror on page 16, I used a simple jig, see photo. This jig does two things. It helps when initially laying out the squares, and it guides the chisel as you cut the opening to its final shape, see box on page 18.

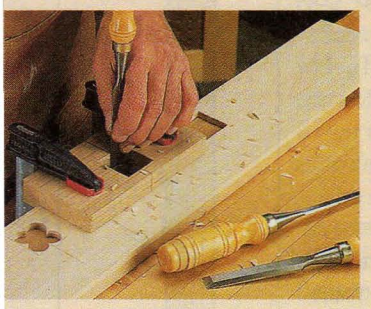

The jig is simply a board with a square opening in it. A lip glued to the top edge helps to position the jig on the workpiece so the squares align, see drawing.

To create this jig, I decided not to cut the square out of a single board. Instead, I glued four scrap pieces together to create a perfect 1½"-square opening, see drawing. Then I glued the lip to the top edge. W

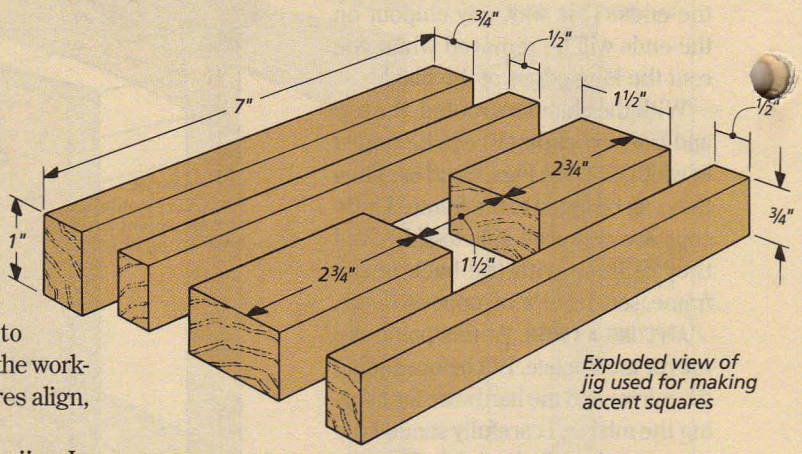

Exploded view of jig used for making accent squares

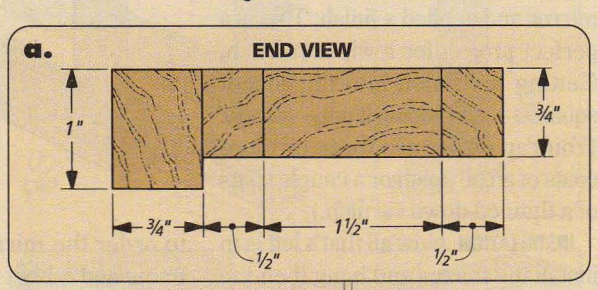

Making a Wood Door Latch

For the chimney cupboard on page 6, I made my own door latch for each door by adding a flipper to a 1¼"-dia. birch knob. The flipper is on the inside of the cupboard and rotates to "lock" the door shut, see drawing.

Unfortunately, the tenon on the knob was too short. So the first thing I had to do was replace it with a longer tenon, see Fig. 1.

To do this, first cut off the existing tenon with a hand saw. Next, a hole is drilled for the new tenon. Shop Note: To hold the knob secure, I used a wood hand screw. Finally for the new tenon, I glued a 1½"-long dowel into the hole.

With the new tenon on the knob, next I cut a kerf on the tenon to hold the flipper, using the table saw and a simple jig, see Fig. 2. To make this jig, first draw a centerline on a piece of scrap and drill a ½" hole near one end. Then to cut the slot in the tenon on the knob, insert it into the hole in the jig and cut a centered, ½"-deep kerf.

At this point, the knob is ready for the flipper, see drawing at right. The thickness of the flipper should match the thickness of the saw kerf just cut in the new tenon, see Fig. 3. (I sized the flipper ½" x 2¼".)

The latch is now ready to be glued together in the door. (Just make sure you don't get any glue in the hole on the door.)

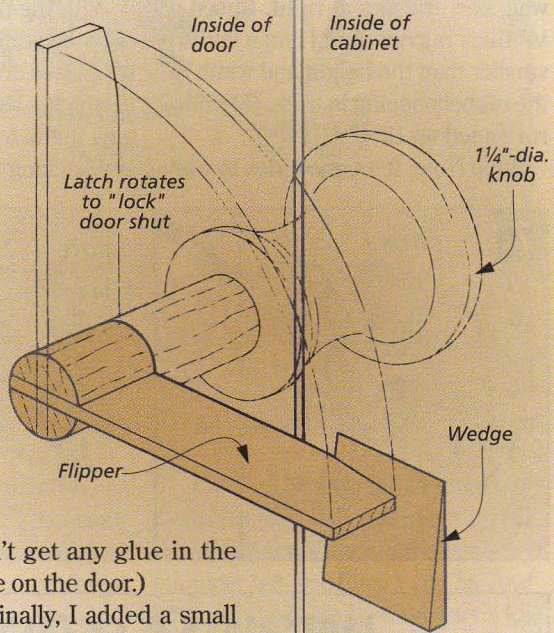

Finally, I added a small wedge to the inside of the cabinet, see drawing above. This holds the flipper tight when it's "locked".

After adding the wedge, I found the flipper a bit tight. So I sanded a slight taper on the edge of the flipper, see Fig. 3. W

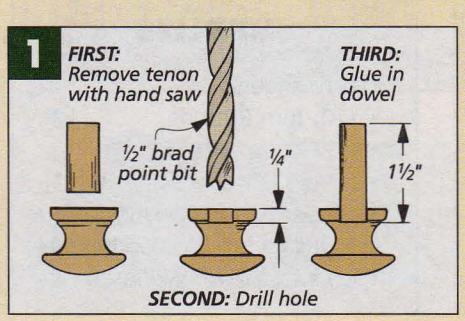

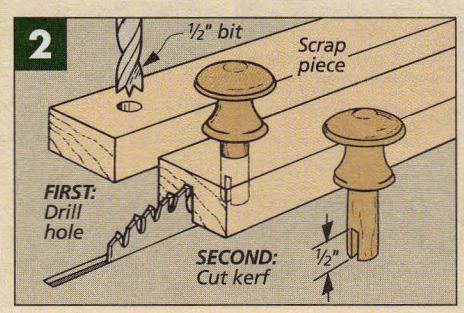

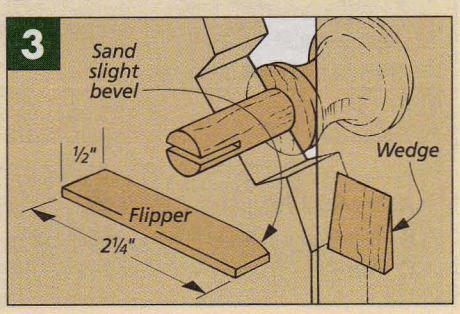

Making Raised Panels

One way to cut raised panels (such as shown on the chimney cupboard on page 6) is to use the table saw. But there are a couple of things I do to make the job go easier and get smooth, clean bevels and shoulders.

To begin, tilt the saw blade (about 7° for the chimney cupboard) and raise the blade to the correct height (1½" in this case), see Fig. 1.

Once the saw blade is adjusted, I actually make the cut in two passes — moving the rip fence slightly between passes.

The first pass removes most of the waste. Then to clean up any burn marks or blade swirls, I make a second "skim" cut. This also creates the ⅛"-wide shoulder on the profile. Note: Before moving the rip fence for the second pass, cut the bevels on *all* the edges of *all* your panels.

Shop Tip: When cutting the profile, cut across the end grain edges first. Then if you get any chipout, it will be removed as soon as the bevel is cut on the face grain edges.

After all the raised panels have been cut, the last step is to sand the bevels. But there's another area that needs attention. Since the blade was tilted, the ⅛" shoulder will be undercut slightly. To square it up, I made a sanding block that has a bevel cut on one edge, see Fig. 2. W

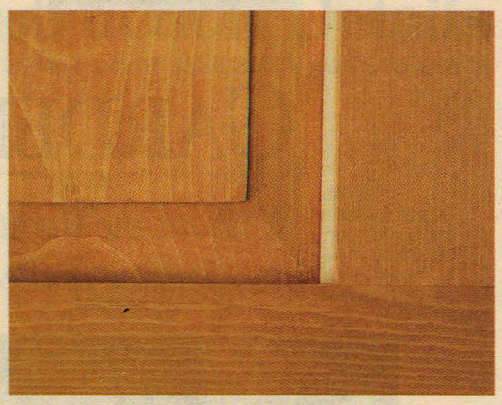

▲ ***Finishing Tip**. If a raised panel shrinks, an unfinished border may appear along the edge. To prevent this, it's a good idea to finish the panel before mounting it in the frame.*

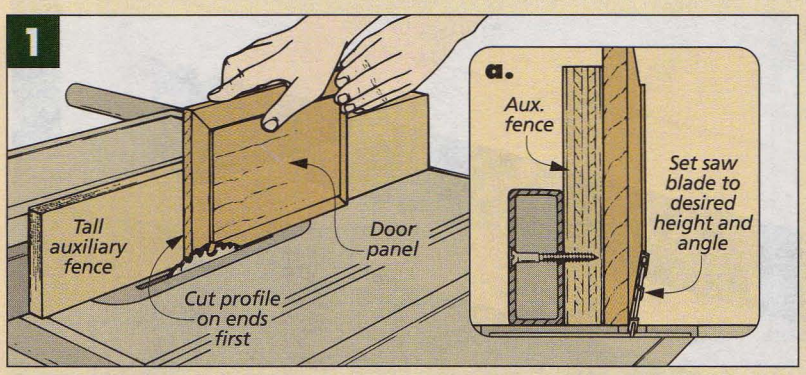

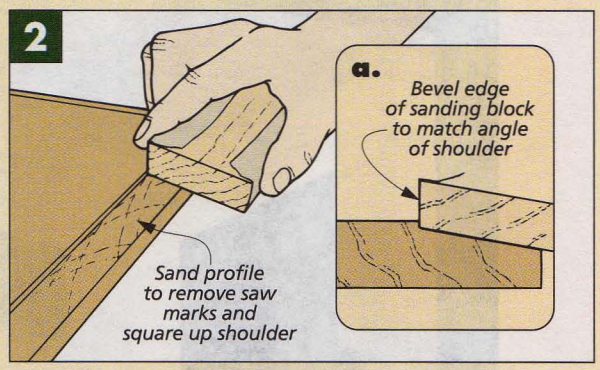

Angle Bracket

To prevent a tall, shallow project from tipping over, I take a little precaution by anchoring it to the wall.

For the chimney cupboard on page 6, I made an angle bracket out of a simple, flat mending strap I picked up at a hardware store. It already had holes drilled in it. All I had to do was bend it, see drawing.

To anchor the cupboard, I set it in place against a wall. Then I set the bracket on top, flush with the wall, and marked its position. Simply screw the bracket in place and then secure it to the wall. W

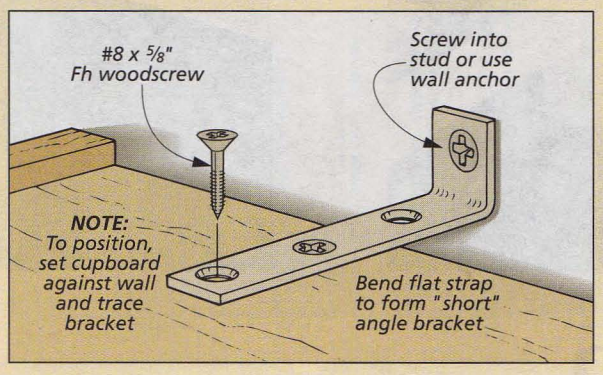

Glass Stops

One way to install a glass panel in a wood frame is to use quarter-round molding. Here's a safe way to make your own quarter-round.

For the glass door on the chimney cupboard (page 14), I started with a 45"-long blank. This blank is ripped extra wide (1¼") and then all four edges are rounded over, see Fig. 1.

Now, the next step to making the stops is to cut ⅜"-deep grooves on each edge, see Fig. 2. To do this, first set the rip fence ¼" from the saw blade and make four passes in all.

Finally, raise the blade and cut off two of the molding strips on the "waste" side of the blade, see Fig. 3. Then move the fence and cut off the other two strips.

Before installing the glass, miter the quarter-round strips to length. Then secure the glass by nailing the stops in place. W

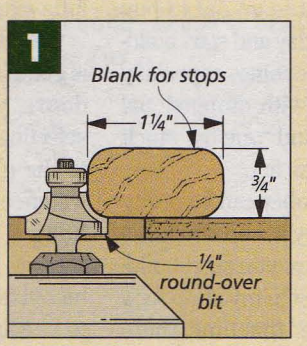

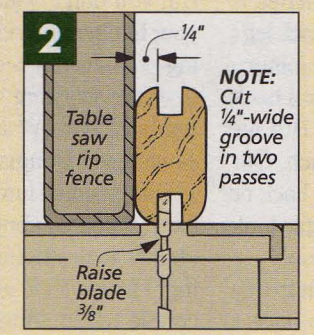

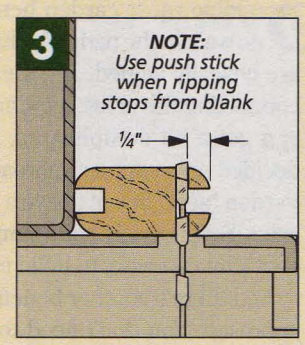

GARDEN SEAT

Without the traditional arms or back of a garden bench, this seat is inexpensive and easy to build, and will fit nicely in a variety of settings.

Building most garden benches is no walk in the park. The back legs are typically angled, and the joinery connecting the arms, legs, and back can get a bit complicated. But we decided on a simpler approach. Our garden "seat" doesn't have a back or arms. So it not only has a simple look — it's much easier to build too.

And there's another benefit to this approach. You don't need to have a large formal garden to justify building this garden seat. It will be right at home on a front porch, beside a flower bed, or in the backyard.

GIVE IT A REST. This garden seat is simple enough to build in a weekend. But you don't want to go out to buy your lumber on Friday and start building on Saturday morning, especially if you're working with dimensional lumber ("two-by" and "one-by" stock — we used Douglas fir).

Dimensional lumber can be pretty "wet" when you buy it, and it needs a chance to dry before you start building. I like to let it set in my shop for a couple weeks. After that time, there are usually small checks in the ends of a few of the boards, and some of the boards will have warped. Waiting allows me to "see" these problems before they get built into the seat. (This is also a good reason to buy a little extra material to begin with.)

OUTDOOR SUPPLIES. Because this seat is going to spend significant time outdoors, you'll want to take care in selecting your supplies. When it came to the glue and hardware, I used a water-resistant glue (Franklin's Titebond II) and galvanized, exterior screws. Note: If your seat is going to be outside all year long (as opposed to keeping it on a porch or storing it away during the winter), you may want to use a waterproof glue like plastic resin or polyurethane glues.

FINISH. The finish will require some extra care too. We used a semi-transparent finish on our seat, see page 28.

Construction Details

OVERALL DIMENSIONS: 48"L x 20⅝"D x 18"H

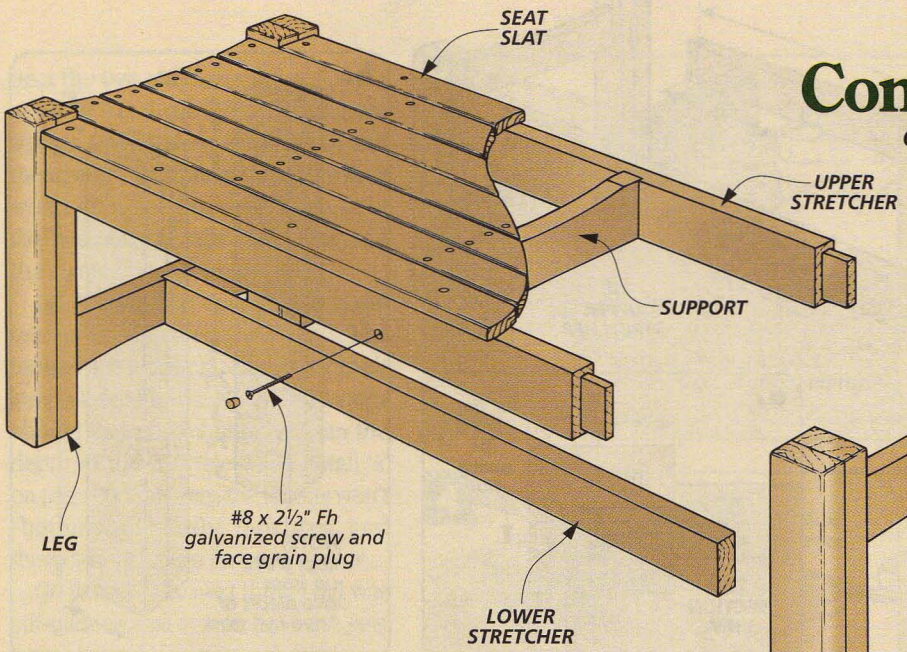

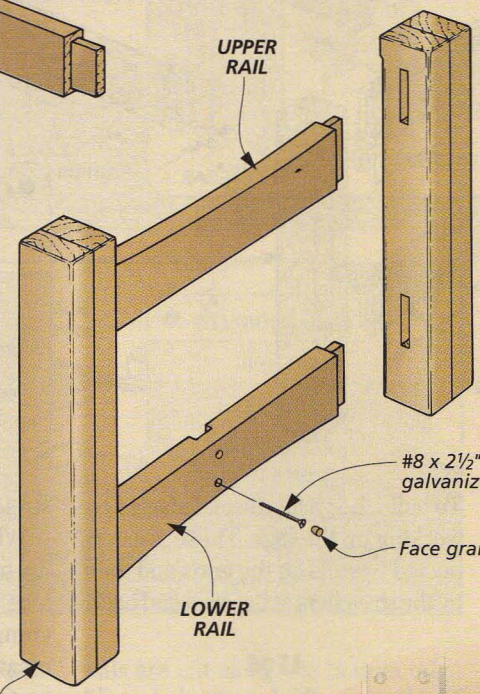

NOTE: *Garden seat held together with galvanized screws and water-resistant glue*

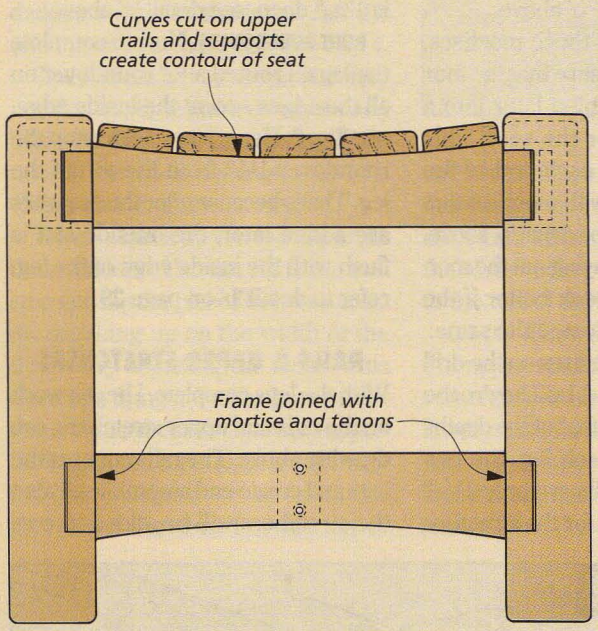

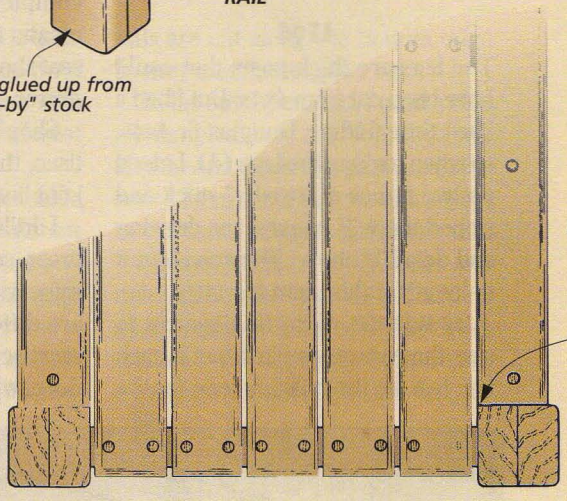

CUTTING DIAGRAM

2 x 8 (1½" x 7¼") - 8' Douglas Fir (10.7 Bd. Ft.)

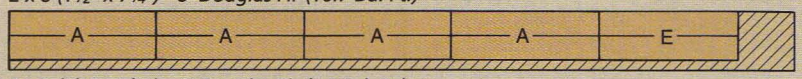

2 x 8 (1½" x 7¼") - 4' Douglas Fir (5.3 Bd. Ft.)

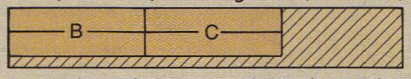

2 x 8 (1½" x 7¼") - 8' Douglas Fir (10.7 Bd. Ft.)

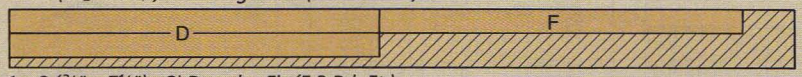

1 x 8 (¾" x 7¼") - 8' Douglas Fir (5.3 Bd. Ft.)

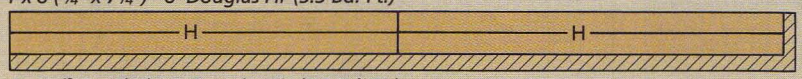

1 x 8 (¾" x 7¼") - 8' Douglas Fir (5.3 Bd. Ft.)

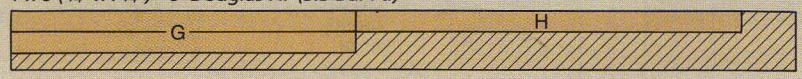

MATERIALS

A	Legs (4)	3 x 3 -18
B	Upper Rails (2)	1½ x 3 - 16⅝
C	Lower Rails (2)	1½ x 3 - 16⅝
D	Upper Stretchers (2)	1½ x 3 - 45
E	Supports (2)	1½ x 3 - 17⅛
F	Lower Stretcher (1)	1½ x 2½ - 44½
G	Fr./Bk. Seat Slats (2)	¾ x 2⅝ - 42
H	Ctr. Seat Slats (5)	¾ x 2⅝ - 47¼

SUPPLIES

- (12) #8 x 2½" Fh Exterior Screws
- (52) #8 x 1½" Fh Exterior Screws
- (64) ⅜"-dia. Face Grain Plugs

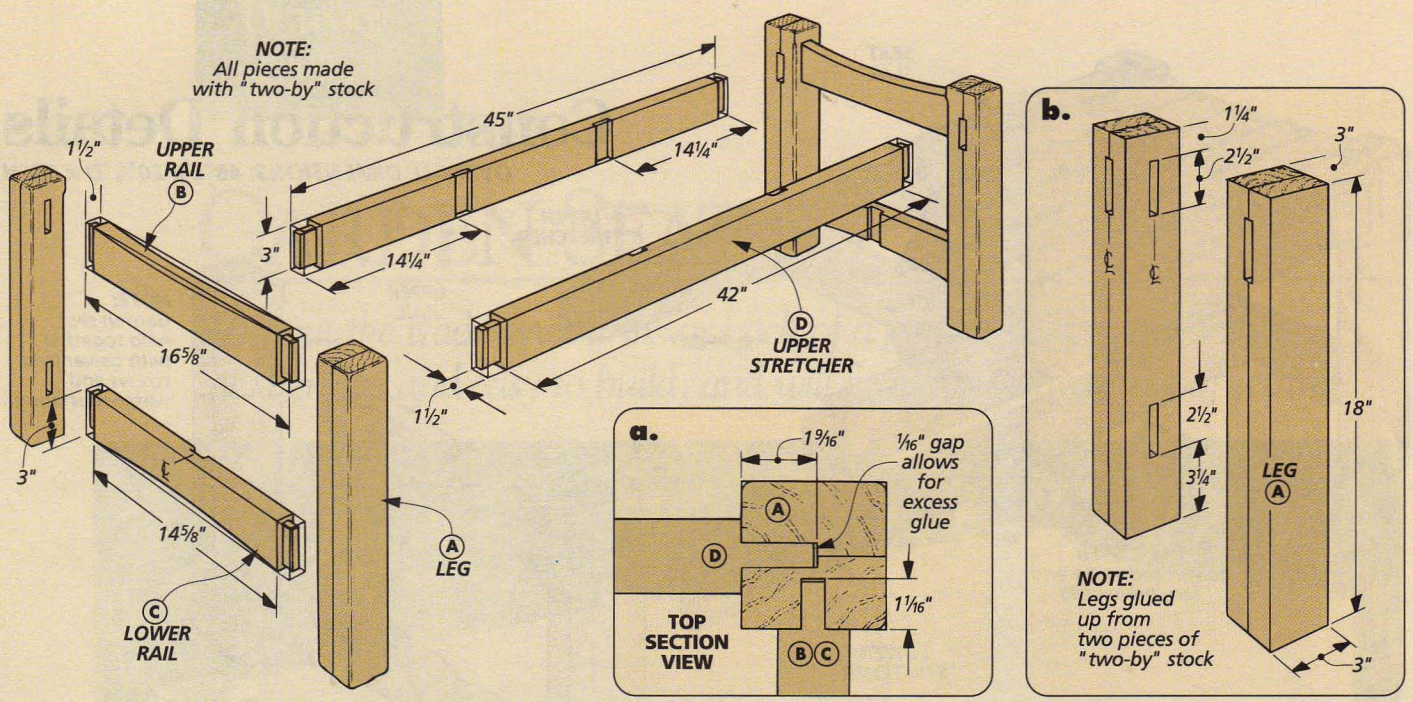

To build the garden seat, I started by working on the legs. These are connected by rails on the ends and then by the stretchers at the front and back.

LEGS

The legs are thick posts that could have been cut from 4x4s. But I had a hard time finding Douglas fir 4x4s, so when making the **legs (A)**, I glued up two pieces of "two-by" stock and ripped them 3" square, see drawing and detail 'b' above. They can be cut to length at this point too (18").

LEG MORTISES. With the legs cut to size, three mortises can be cut in each leg: two for the rails and one for the stretcher, see detail 'b' above.

When laying out these mortises, the trick is to make sure that the four legs can be assembled later into a complete frame for the seat. This means the legs on each end of the seat should end up with mortises that mirror each other, see detail 'b' above.

Shop Tip: When laying out the mortises, the legs will look better if the joint lines are all oriented the same.

I drilled these mortises on the drill press, see Figs. 1 and 1a. They're the same width and length, but the depths are different. On each leg, the two mortises for the rails are only 1 1/16" deep, while the one for the stretcher is 1 9/16" deep, see detail 'a' above.

ROUT ROUNDOVERS. Now to complete the legs, I routed a ¼" roundover on all the edges *except* the inside edge, see Fig. 2. Here, you want to stop the roundover 1¼" from the top of the leg. That's because after the seat slats are added later, the outside slat is flush with the inside edge of the leg, refer to detail 'b' on page 29.

RAILS & UPPER STRETCHERS

With the legs complete, I began work on the rails and upper stretchers, see drawing above. The rails connect the legs and create end assemblies. Later, the stretchers will be added to con-

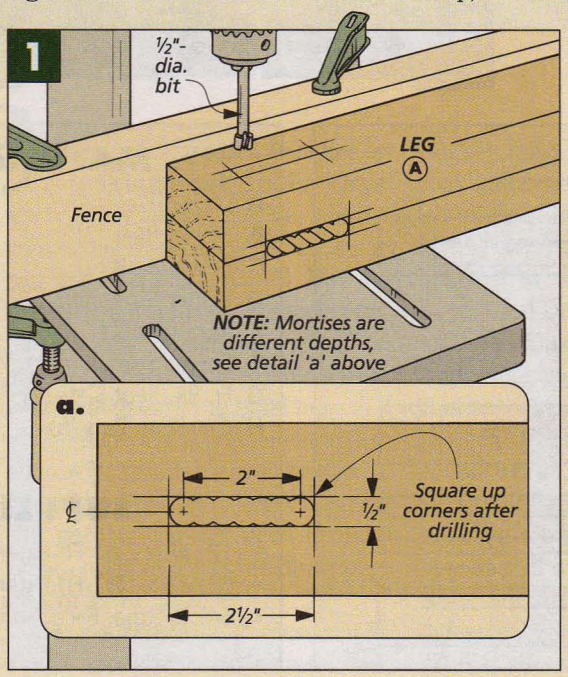

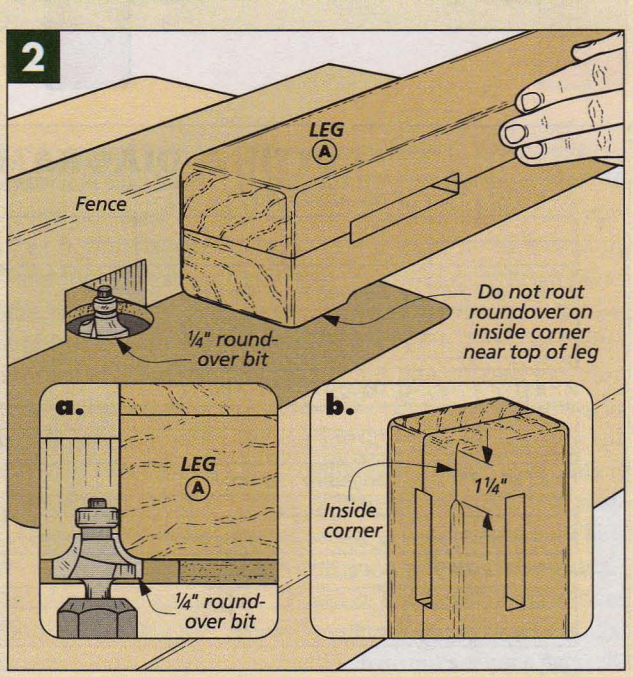

nect the two end assemblies.

CUT TO SIZE. I started by ripping the **upper (B)** and **lower rails (C)** and the **upper stretchers (D)** to finished width (3"), see drawing. Then I cut the two pairs of rails 16⅝" long and the stretchers 45" long.

CUT TENONS. The next step is to cut tenons on each piece, see Fig. 3. The tenons are identical, except for their lengths, see Fig. 3a. Note: The tenons should end up 1/16" shorter than the depth of the mortises, see detail 'a' on page 26. This way, the tenons won't "bottom out" in the mortises, and there will be room for excess glue.

CUT DADOES. The next thing I did was cut dadoes that would hold the seat supports and lower stretcher that are added later, refer to page 28. These dadoes are cut in the lower rail (C) and upper stretchers (D), see Fig. 4.

The dadoes are ½" deep, and they require multiple passes over a dado blade so they will match the thickness of the stock, see Figs. 4 and 4a. (Mine ended up 1½" wide.)

Here's a quick tip you can use to cut these dadoes: Use the rip fence as a stop and flip the pieces between passes, sneaking up on the width of the dadoes by adjusting the fence. This does two things. On the lower rails, this technique centers the dadoes perfectly. (All you have to do is start with the blade roughly centered on the piece, see Fig. 4a.) For the upper stretchers, flipping the pieces locates the dadoes the same distance from each end. (But this time, start with the blade cutting the shoulder closest to the end of the piece.)

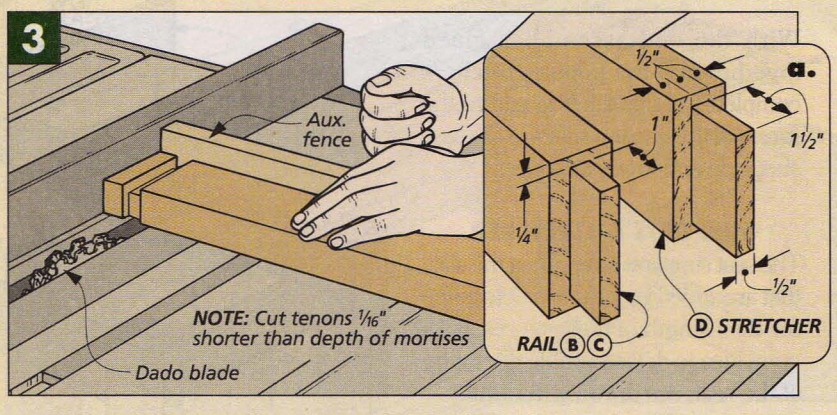

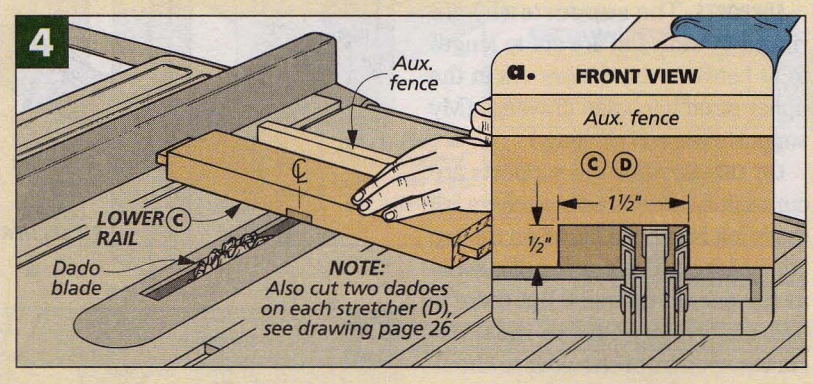

CUT CURVES. At this point, I set aside the upper stretchers so I could cut some curves on the upper (B) and lower rails (C), see drawing on page 26. On the upper rails, this curve creates a more comfortable surface for sitting. And the curve on the lower rails are cut along the bottom edge so they match the upper rails.

To lay out the curves, I used a simple template, see box below. (It will also be used for the seat supports later.) Then cut the curve with a band saw or sabre saw and sand it smooth.

END ASSEMBLIES. Now the legs and rails can be glued together. But don't glue the stretchers between these end assemblies quite yet. There are a couple more pieces to add first.

CURVE TEMPLATE

This garden seat requires six curves in all: one on each of the upper and lower rails and on the seat supports. But fortunately, all these curves are identical. So when laying them out, I decided it would be quickest to create a hardboard template so the pieces would end up the same.

There are a couple ways to lay out the curve. You can either draw graph lines and plot points on the blank. Or bend a straightedge and trace it onto the template blank.

With the curve laid out on the blank, next you can cut it out with a band saw or sabre saw and then sand it smooth — just like it will be done on the workpieces.

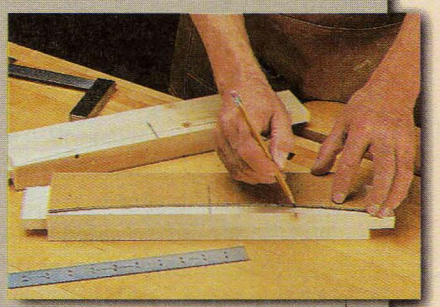

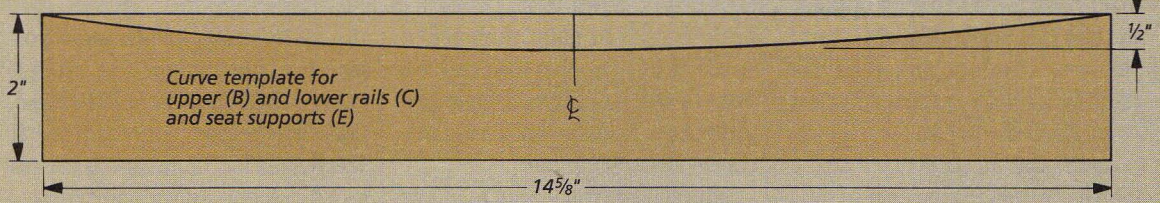

With the end assemblies glued together and the upper stretchers complete, all that's left to add to the frame of the garden seat are the seat supports and lower stretcher.

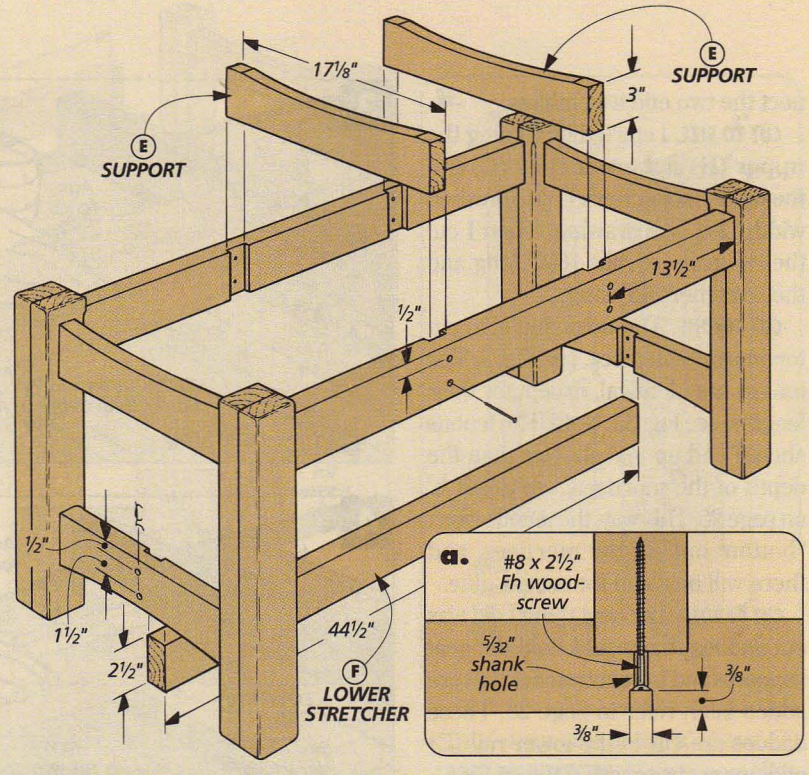

SUPPORTS & STRETCHER

The seat supports strengthen the slats that are added later. And to determine the final length of these pieces, it's a good idea to dry assemble the frame of the seat, see drawing at right.

SUPPORTS. The **supports (E)** are ripped 3" wide and are cut to length to fit between the dadoes cut in the upper stretchers, see drawing. (My supports were 17⅛" long.)

CUT CURVES. After the supports are cut to fit between the stretchers, all that's left is to cut a curve on the top edge of each. This curve is the same as the one on the rails. But there is one difference. On the rails, the curves span from shoulder to shoulder, but the seat supports are a little longer. So the curve is simply centered side-to-side, which leaves a flat spot at each end of the support, see Fig. 5. (I used the same curve template, see the box on page 27.)

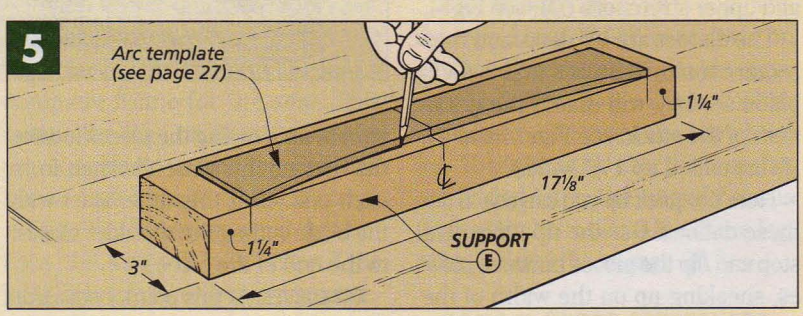

ASSEMBLY. After the curves have been cut and sanded smooth, the seat supports can be glued and screwed between the two stretchers. To do this, I drilled counterbored pilot holes in the upper stretchers, see detail 'a' above. Note: Since there will be more holes to plug after the seat slats are added, I decided to wait until later to plug these holes, refer to Fig. 7. (For more on adding plugs, see page 34.)

After I glued the seat supports between the stretchers, I glued the end assemblies in place, see drawing above. Now all that's left for the frame is to add the lower stretcher.

LOWER STRETCHER. The **lower stretcher (F)** is ripped to width to match the lower rail at the center, see drawing above. (Mine was 2½" wide.) Then I

FINISHING THE GARDEN SEAT

When it's time to apply a finish on an outdoor project like this, you have several options from which to choose. It all depends on what ends up underneath the finish.

OUTDOOR OIL. If I'd wanted to let the grain of the wood stand out as much as possible, I could have used an oil finish formulated for outdoor use, like DAP's Woodlife or General Finishes' Outdoor Oil. This is a good choice with a more expensive wood, like redwood. But you'll want to renew the finish every year by applying an additional coat of oil.

PAINT. Another option is to paint the bench with an alkyd primer and a couple coats of latex paint. This, of course, covers up all that beautiful wood grain, but paint will protect the wood better (and longer) than any other finishing option.

SEMI-TRANSPARENT STAIN. When it came right down to it, I couldn't bring myself to paint the garden seat. But I was willing to sacrifice a little of the wood grain for more protection. So I used a semi-transparent stain, see photo.

BRUSHING TIP. You'll want to follow the instructions for the stain you pick out. But I found that when it came to staining the vertical sections like the legs, a dry foam brush was helpful for removing the excess so I didn't end up with any runs.

cut it to length to fit between the dadoes in the lower rails. (My stretcher ended up 44½" long.) And like the supports, it's glued and screwed in place, see detail 'a' on previous page.

SEAT SLATS

At this point, the only pieces left to add are the slats for the seat, see drawing at right. The seat slats are only ¾" thick, so if you can't find ¾"-thick ("one-by") stock, you'll need to resaw and then plane some thicker material down to size.

CUT TO SIZE. I started by ripping seven seat slats to finished width (2⅝"), see drawing and detail 'b' at right. Then I cut them to final length. The **front** and **back seat slats (G)** are cut to fit between the two legs (42"). The **center seat slats (H)** are cut to set back ⅜" from the outside face of each leg. So I measured the overall length of the seat (48") and subtracted ¾", see detail 'b' at right. (My center slats ended up 47¼" long.)

ROUND OVER EDGES. Before attaching the slats, I softened their edges by routing a ⅛" roundover around the top edges of each, see Fig. 6. The center slats are routed on all four edges, see Fig. 6a. But since the ends of the front and back slats butt up against the legs, only the long edges are routed.

ASSEMBLY. Now the slats can be glued and screwed to the frame of the seat, see Fig. 7. Again, they're counterbored ⅜" deep and will be plugged later, see detail 'a' above.

I added the front and back slats (G) first. They're positioned flush with the inside edge of the legs, see detail 'b' above. (The counterbored pilot holes are centered on the width of the slats.) Next, I centered one center slat (H) between the legs. Then to add the other center slats, all you need to do is use some spacers to make sure the gaps end up the same between all the slats, see Figs. 7 and 7a. (My spacers were about ¼" thick.)

All that's left is to plug the screw holes. Plugging sixty-four holes isn't difficult, but it does take a little time. Then you can apply the finish, see the box on page 28. W

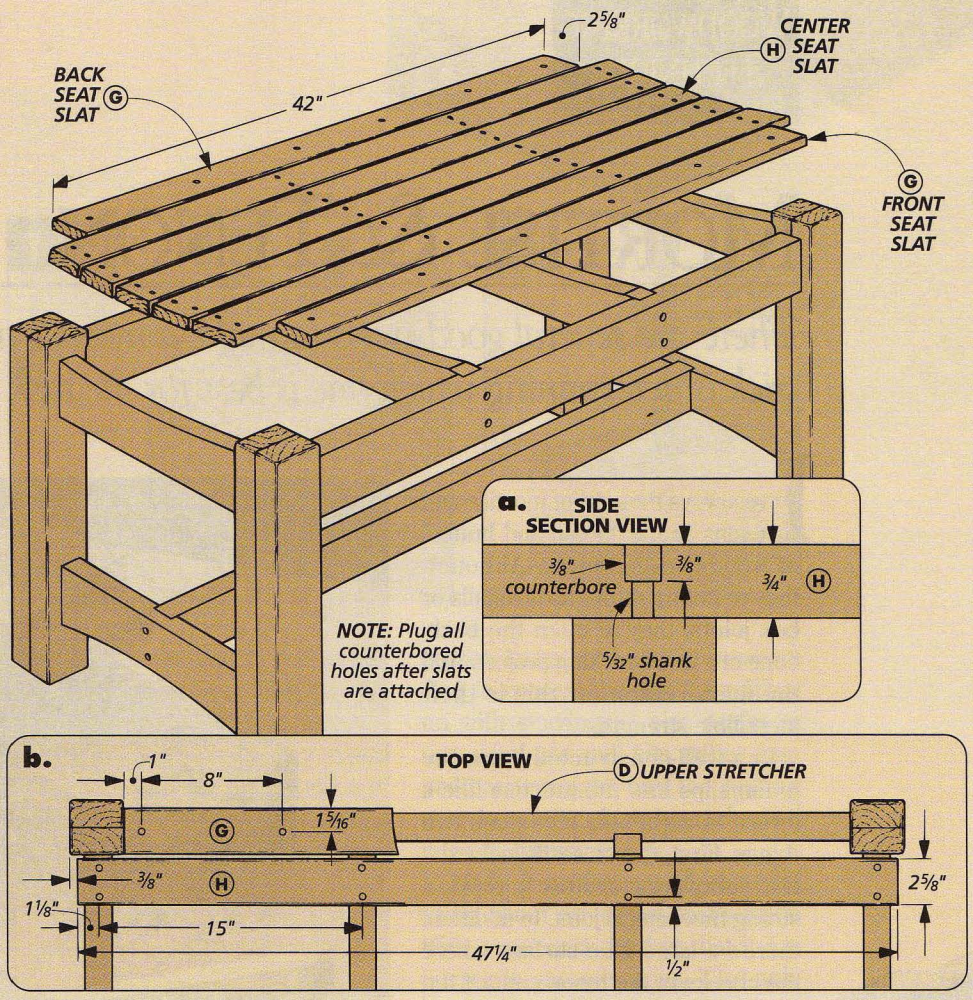

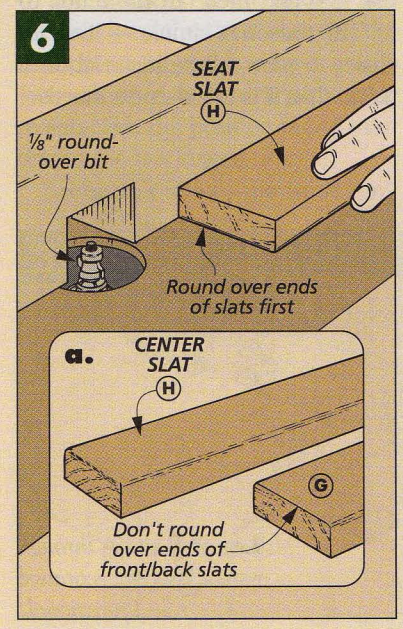

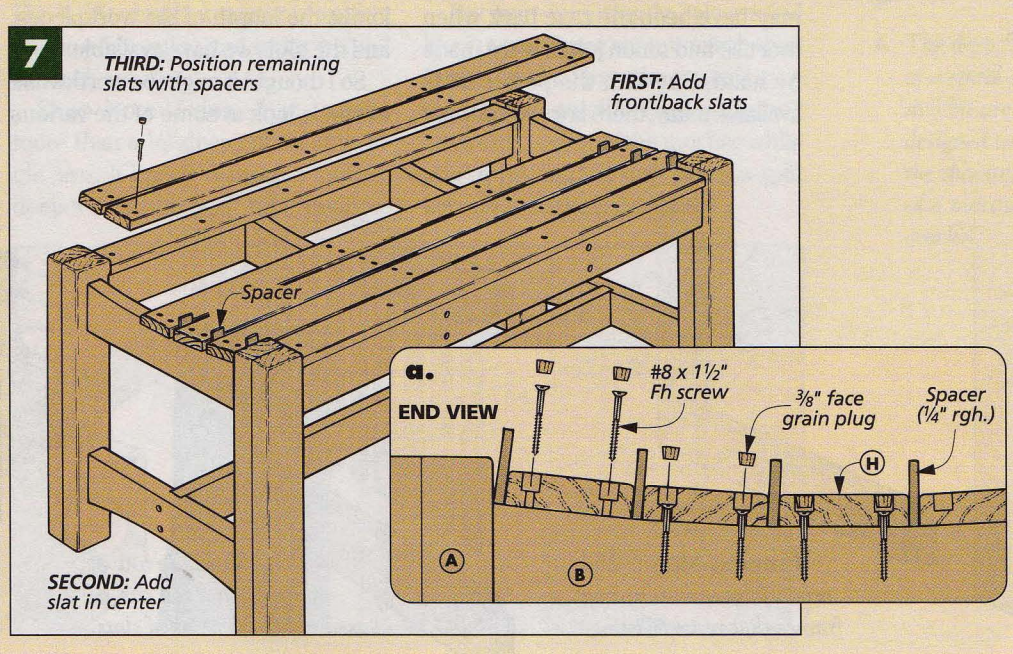

MORTISE & TENON

There are several good ways to make a mortise and tenon joint. The trick is determining which one is best for the task at hand.

I've always thought of mortise and tenons as the "bread and butter" of woodworking joints. Although they're not as showy as dovetails or box joints, they're often the backbone of a woodworking project. And the main reason for this is their incredible strength.

In a well-constructed joint, the tenon slips into the mortise like a sword in a sheath. This does two things. First, the close fit locks the two workpieces together to create a strong mechanical joint. In addition, there's a large glue surface where the cheeks of the tenon contact the sides of the mortise, so it provides a strong glue joint as well.

Maybe this explains why mortise and tenon joints have been around for so long, and why you'll find them just about everywhere, see the examples below.

MULTIPLE METHODS. You might think there's a single, proven method for making such a universal joint. This may have been the case back when mortise and tenon joints were made by hand. But with the power tools available today, there are several ways of creating both the mortise and the tenon. The trick is deciding on the best method in each situation.

Here in the *Woodsmith* shop, we use several different methods on a regular basis. But the technique we choose depends on the size and number of joints, the length of the workpieces, and the tools we have available.

So I thought it might be worthwhile to take a look at some of the various techniques for creating a mortise and tenon joint and explain how to go about selecting the best method.

Regardless of the method that's chosen, I almost always follow the same sequence when making a mortise and tenon joint. I make the mortise first and then cut the tenon to fit. The reason is simple — it's a lot easier to pare a little material off a tenon than it is to enlarge a mortise.

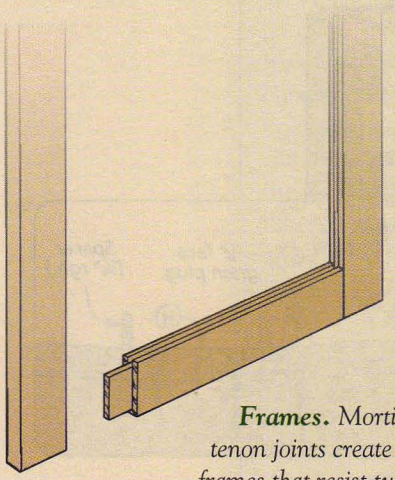

Frames. *Mortise and tenon joints create strong frames that resist twisting.*

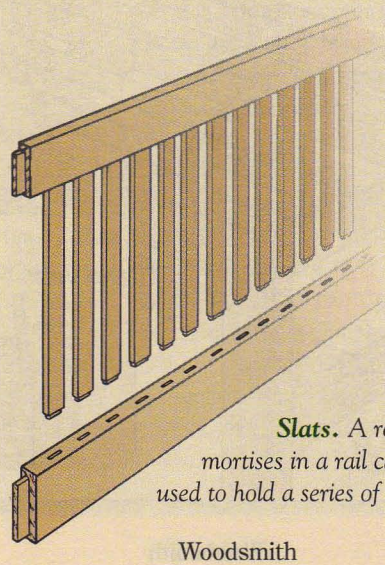

Slats. *A row of mortises in a rail can be used to hold a series of slats.*

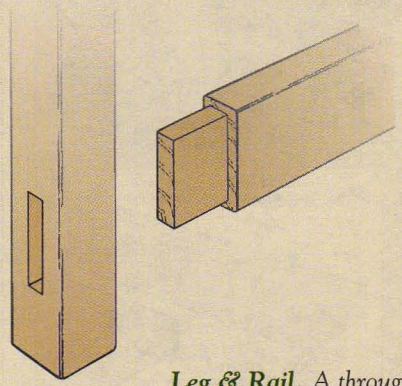

Leg & Rail. *A through mortise is both decorative and functional.*

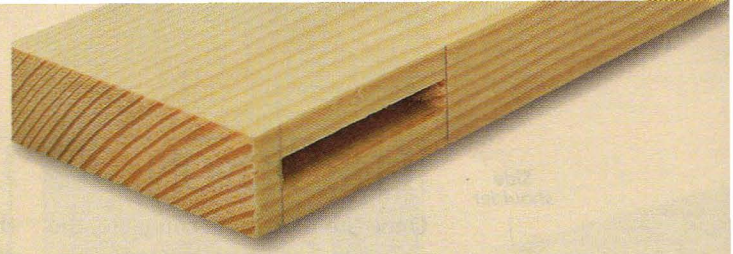

THE MORTISE

There's more to making a mortise than simply hacking out an opening in a workpiece. Anytime I'm making a mortise, I'm concerned with a couple of things — speed and accuracy.

I want a quick way to remove the material from the workpiece to create the mortise. But I also want to make sure the ends of the mortise are square with the sides, and the sides are square with the face of the workpiece. This is important if you want to get a good fit with the tenon.

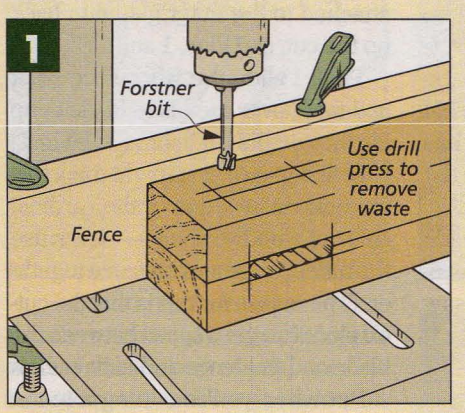

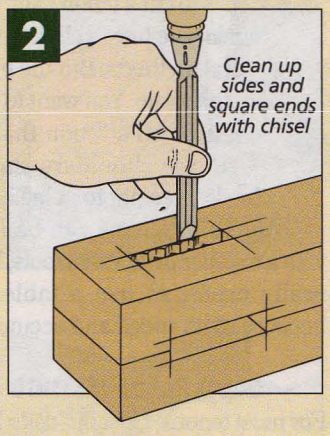

DRILL PRESS METHOD

One of the simplest methods available that satisfies both these requirements is to use a drill press to remove most of the waste of the mortise, see Fig. 1. Using a Forstner or brad point bit, I drill a series of overlapping holes to create a rough opening. Then I square up the ends and sides of the mortise with a chisel, see Fig. 2.

Shop Note: If your workpiece is too long or heavy to place on a drill press, try using a portable drill with a dowel jig or a Portalign to guide the drill bit.

There are a couple things I like about this method (which is probably why I use it more than any other). First, it doesn't require any lengthy setup of equipment. The width of the mortise is determined by the diameter of the drill bit and the depth by the depth stop on the drill press. All you need is a simple fence clamped to the drill press table to establish the position of the mortise in the workpiece.

Second, it allows me to see my work at all times. As I'm drilling the row of holes, it's easy to tell if I'm wandering outside of my layout lines.

As useful as it is, drilling a series of holes and cleaning up the sides of each mortise with a chisel can be a time-consuming task, particularly if you have a lot of mortises to make. For some projects, it makes more sense to use a different technique.

ROUTER METHOD

Sometimes I need to make a series of identical mortises in a workpiece. For example, if I'm building a project with a row of slats or spindles, I use a router to cut the mortises.

Using an edge guide or a shop-made jig, it's possible to rout a series of mortises in less time than it would take to drill them on a drill press, see Fig. 3. It's simply a matter of setting up the edge guide and routing a slot for each mortise.

Shop Note: I don't like to take more than a 1/4"-deep cut on any single pass. If I need to make a mortise deeper than this, I'll take multiple passes, lowering the bit in between. And to prevent the slot from filling up with shavings, I also prefer to use spiral end mill bits rather than ordinary straight bits for routing mortises, see photo at right and page 35 for sources.

Aside from the speed, the nice thing about a mortise that's made with a router is the fact that it has perfectly smooth sides. The only handtool work that's required is to square up the ends of the mortise with a chisel, see Fig. 4.

DRAWBACKS. There are a couple of downsides to using a router for making mortises, though. First, although it's possible to get by with a standard router, routing mortises is really a job that calls for a more expensive plunge router.

But more importantly, I always feel like I'm sacrificing some control when I use a router. Since the router cuts a mortise so quickly (and you don't have a clear view of the mortise while you're routing), it only takes a split second to make a mistake.

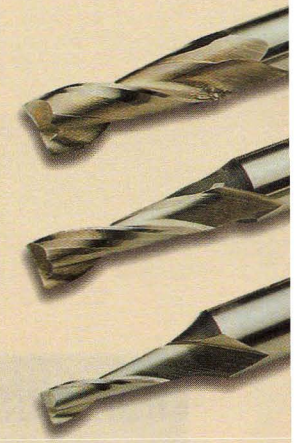

▲ *The deep flutes of a spiral end mill bit are designed to pull the shavings out of a mortise quickly.*

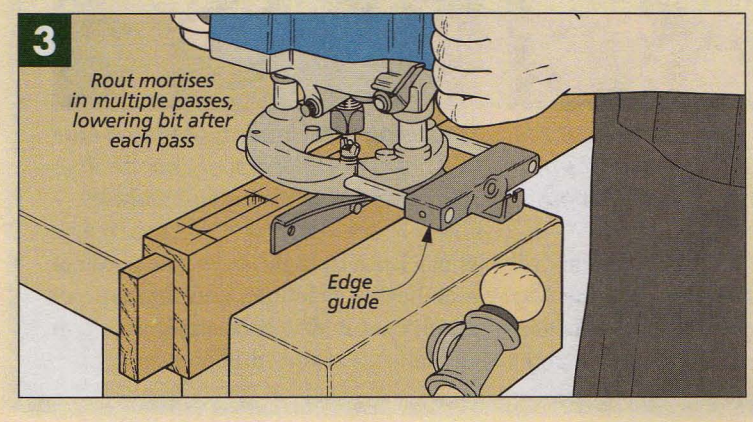

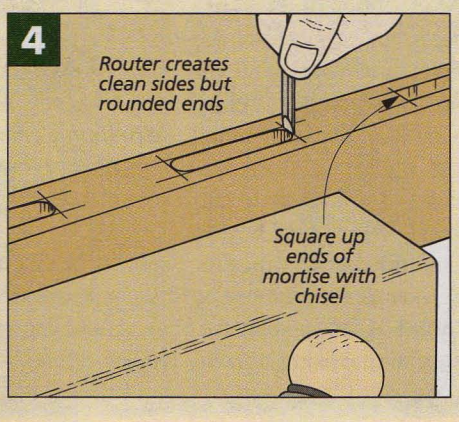

THE TENON

Once the mortise is complete, the next step is to cut a tenon to fit. Here again, you have a choice of several methods. But the goal is the same. You want to wind up with a tenon that has square shoulders and flat cheeks, see photo at left.

Although tenons can be made with a number of different tools, I generally prefer to use a table saw because of its speed and accuracy.

DADO BLADE METHOD

For most tenons, I install a dado blade in my table saw and remove the waste from the cheeks of the tenon by making multiple passes. I use the rip fence as a stop to determine the length of the tenon and an auxiliary fence attached to the miter gauge to back up the cut, see Figs. 1 and 1a.

Then I slide the workpiece back and forth over the blade to clean up any saw marks left behind, see Fig. 2.

At first glance, you might think this method violates one of the cardinal rules of woodworking — never use the miter gauge and rip fence together. (The reason for this is that the cut-off piece can get trapped between the blade and the fence and kick back.)

But when you're cutting a tenon with a dado blade, you're not making a *through* cut. So there isn't any cut-off piece to worry about.

I prefer this method for a couple of reasons. First, the dado blade removes a wide swath of material with each pass. So it's a simple matter to cut even a long tenon quickly.

But more importantly, I find it easy to "fine tune" the fit of the tenon by making some quick adjustments. If the tenon is too thick, I simply raise the dado blade a hair. If the tenon is too short, I just move my rip fence away from the blade.

TENON JIG

The dado blade method works well in most cases, but it does have one drawback. The dado blade has a tendency to leave ridges on the face of the cheeks. If you're cutting a through tenon or an open mortise and tenon (where part of the tenon will be

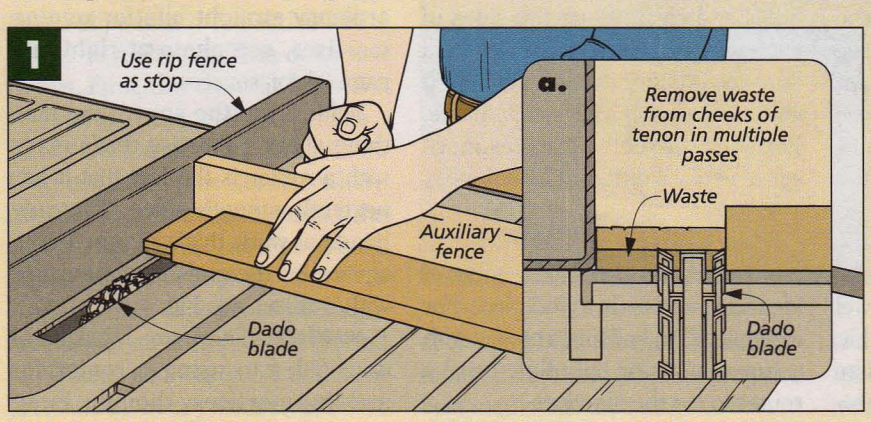

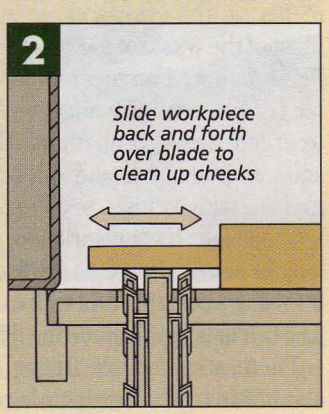

HOLLOW CHISEL MORTISING

If you want to make mortises quickly, there are a couple of specially designed tools that will drill square holes. All you need is a mortising machine or a mortising attachment for your drill press.

The secret is in the hollow chisel bits they use. These consist of a drill bit surrounded by a square, thin-walled chisel. As the bit is lowered into the wood, it removes most of the waste while the chisel squares up the sides at the same time.

MORTISING MACHINE. If you can afford it, a mortising machine is a great way to cut square mortises, see left photo. They're quick, efficient, and precise. But they're expensive — $300 and up for most models.

MORTISING ATTACHMENT. A less expensive alternative is a special mortising attachment that fits on the quill of your drill press. It works in much the same way as a mortising machine and uses the same hollow chisel mortising bits, see right photo. But it lacks the speed and power of a dedicated machine, and this type of attachment is time-consuming to put on and take off of your drill press.

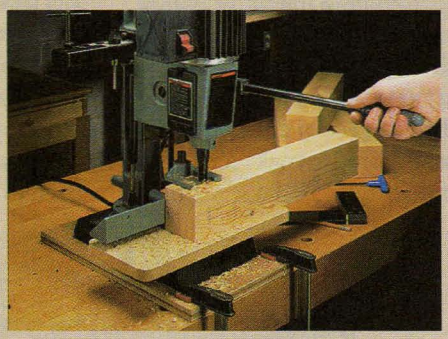

***Mortising machine**. This special tool uses hollow chisel bits to drill out the mortise and square up the ends all at once.*

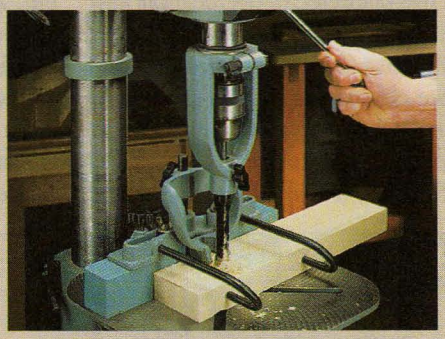

***Mortising attachment**. Mounted on a drill press, this attachment also uses hollow chisel bits to cut square mortises.*

exposed), you want all the tenons to have smooth-faced cheeks. That's where a tenon jig comes in handy.

A tenon jig (you can buy a commercial jig or make your own) allows you to cut each cheek of a tenon in just two passes, using a single blade. This eliminates the ridges that most dado blades leave behind.

To start with, you simply raise the blade slightly to make the shoulder cuts, see Fig 3. Then riding in the miter gauge slot or straddling the rip fence, the tenon jig holds a workpiece upright so you can cut each cheek, see Fig. 4.

Although this method gives you a tenon with nice, smooth cheeks, there are a couple of reasons I don't use it for all my tenons. For one, it doesn't work well with long pieces, since it's necessary to stand the workpiece on end while using the jig.

Second, there's no way to cut side shoulders on a workpiece with a tenon jig. So if you're making a tenon with side shoulders, you have to come back and nibble away the waste with the saw blade, see Fig. 5.

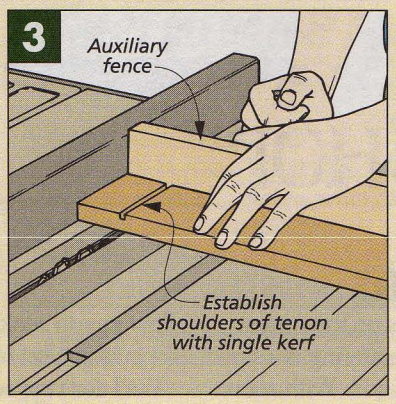

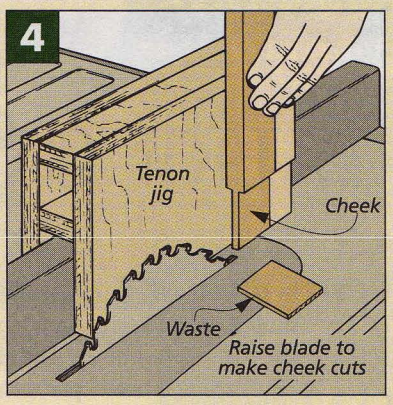

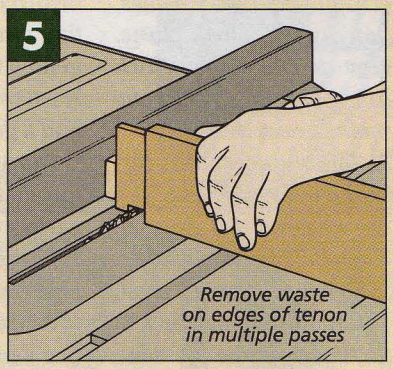

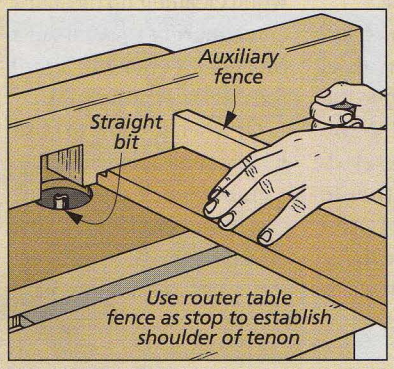

▲ *For cutting stub tenons quickly and cleanly, I like to use a router table and a straight bit.*

ROUTER

There's one other method I use to make tenons that is worth mentioning. A router table and a router equipped with a straight bit is a great way to cut tenons on small workpieces, see drawing at left. A fence controls the length of the tenon and a miter gauge helps guide the workpiece past the router bit.

A router table combines the best of both worlds — the speed and control of the dado blade method and the smooth results you get when using a tenon jig. But it works best with short, shallow tenons that can be cut on a single pass (like stub tenons for a door or for tenons on the ends of small spindles). W

FITTING A MORTISE & TENON JOINT

No matter what method you use for making a mortise and tenon joint, there's still a good chance that you will have to do some "fine tuning" to get a perfect-fitting joint.

LOOSE FIT. One of the most common problems encountered in mortise and tenon joinery is a gap between the shoulder of the tenon and the mortised workpiece. This is caused by a shoulder that isn't perfectly square or cut cleanly.

To avoid this problem, I like to undercut the shoulders of the tenon slightly with a chisel. This pulls the tenoned workpiece up tight to the mating workpiece when the joint is assembled, see left photo.

STEPPED SHOULDERS. A common problem when cutting a four-shouldered tenon is stepped shoulders. But instead of trying to get all four shoulders flush when cutting them on the table saw, I leave the edge shoulders intentionally high. Then I come back with a chisel and pare them flush with the side shoulders, see right photo below.

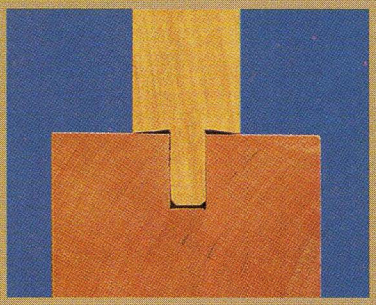

Perfect fit. *To get a tight joint line, slightly undercut the shoulders of the tenon with a chisel.*

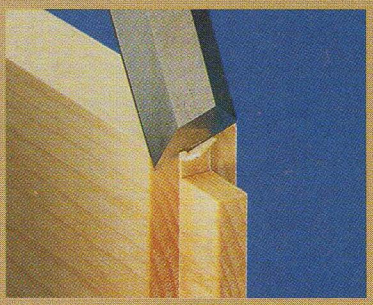

Stepped Shoulders. *Cut shoulders on edges of tenon slightly proud, then trim flush.*

TALKING SHOP

Power Tools or Hand Tools?

Q: I've noticed that when chamfering the edge of a piece, most times you use a router. But other times, you'll use a block plane. How do you decide which to use? Do you prefer one method over the other?

A: The answer to this particular question is easy — I use whatever tool gives me a good chamfer quickest.

So if there's only a small amount of chamfering to do, I can get the job done with a hand plane quicker than setting up a router and a chamfer bit. But when there are a number of workpieces, then I'll take the time to set up the router.

But chamfering is a simple technique. With more involved joinery, like cutting a mortise and tenon, getting the job done quickly isn't as important as getting a good-fitting joint.

TWO STEPS. To get a joint that fits tight, I typically use a two-step approach. First, I cut the joint. Then I fine-tune the fit of the joint.

CUTTING JOINTS. When cutting joints (except for joinery like hand-cut dovetails), I prefer power tools. After all, power tools are fast. They can remove a lot of material quickly. And they allow you to make repetitive cuts consistently.

But I don't expect perfect results with power tools. Sometimes, a tenon will fit into its mortise right off the bat. But more often than not, I need to fine-tune the fit of the tenon — shave a little off the cheek or clean up the shoulder a bit.

FITTING JOINTS. Here, hand tools are indispensable. When it's time to refine the fit of a joint or finish the work a power tool has started, hand tools provide much more control. And they're also more forgiving when you make a mistake — belt sanders and table saws can remove too much material too quickly.

So what kind of clean-up work do I do with hand tools? Here are a couple quick examples.

Sometimes, a hand tool will work where a power tool won't. For instance, when cleaning up the sides and squaring the ends of a mortise, a chisel is about the only tool you can use.

Or when it's time to fit an inset door into an opening, I grab a block plane. This way, I can remove just what I need to get the small, consistent gaps I'm after. W

Drilling & Plugging Screw Holes

Drilling and plugging screw holes is one of the "basics," but I thought it might be a good time to review and pass on a few tips.

The first thing to do is drill the counterbored pilot hole. Nothing difficult here, though I do follow a specific sequence, see the drawings below.

With the holes drilled, it's time to add the plugs. Here you can choose either end or face grain plugs.

When I want to hide the plugs as much as possible, I use face grain plugs. You can't make them disappear completely. But you can get close if you take the time to match the plug to the wood around it, *and* if you don't stain the project. Once you stain the wood, the color tends to collect around the plug and darken the outline. (This is still better than the much darker end grain plugs.)

I also get a better fit by using a tapered plug cutter. (For sources, see page 35.) And I find that tapered plugs tend to chip out less than straight ones. W

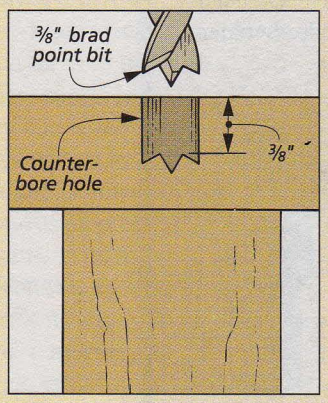

1 *To drill and plug holes for woodscrews, first drill a counterbore to accept the plug. Drill the hole about 3/8" deep.*

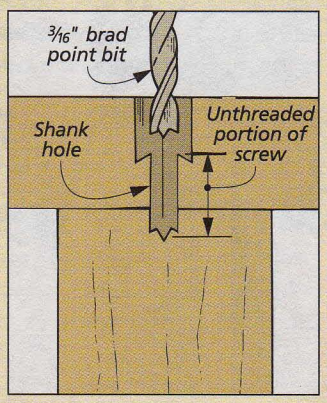

2 *Next, drill a hole to fit the shank of the screw. (The shank is between the threads and the head of the screw.)*

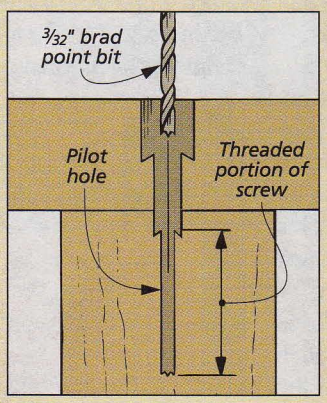

3 *To complete the drilling for a #8 woodscrew, drill a 3/32"-dia. pilot hole for the threaded portion of the screw.*

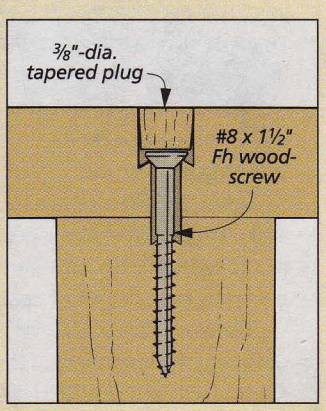

4 *After installing the screw, plug the hole. Once the glue dries, trim the plug with a handsaw and sand smooth.*

SOURCES

Woodsmith Project Supplies offers hardware kits and supplies for some of the projects shown in this issue. Similar supplies for these projects are also available at local woodworking stores or the mail order sources at right.

CHIMNEY CUPBOARD

A hardware kit for the chimney cupboard featured on page 6 is currently available from *Woodsmith Project Supplies*. This kit includes the following:

(2) 1¼"-dia. Birch Knobs
(1) ½" x 6" Birch Dowel
(2 pr.) 2" x 1⅜" Brass Ball-tipped Hinges
(12) Spoon-type Supports
(12) #8 x 2" Fh Screws
(4) #8 x 1¼" Fh Screws
(4) #8 x 3" Fh Screws
(100) #3 Finish Nails
(1) ⅝" x 4" Mending Plate
(2) #8 x ⅝" Fh Screws
Chimney Cupboard Kit
7116-100 .....$18.95

Note: This hardware is also available from the sources listed at right, except the flat mending plate, which you can find at a local hardware store.

GLASS DOOR. If you wish to use glass in the upper cabinet door, then you'll need some extra supplies.

The glass we used was tempered glass. It's safer than plate glass if it happens to break. But because you can't cut this glass yourself, you'll need to order it to exact size. So don't place your order until after the door frame is built and the rabbet has been cut. (Size the glass ⅛" smaller than the opening of the rabbet.)

Also, I should mention that most tempered glass comes with a permanent stamp. But you can ask the glass shop to leave it off.

The only other thing you need for the glass door are some ⅝"-long brads for securing the stops.

PINE FINISH. To finish the cupboard, I used three different products. To stain the pine, I used General Finishes' Seal-a-Cell Honey Maple stain. But to prevent blotching, I put down a coat of Seal-a-Cell Clear underneath the stain, see page 15. Then I applied General Finishes' Royal Finish (Satin), see sources at right.

GARDEN SEAT

The garden seat on page 16 is going to spend quite a bit of time outdoors, so that means you'll want to take extra care when building it.

We used galvanized exterior screws and a water-resistant glue (Franklin's Titebond II) to build our seat. But if you plan to leave the project out all year long, you may want to use stainless steel or silicon bronze screws, see sources at right. And you may want to use a "water-proof" glue, like epoxy, polyurethane glue, or plastic resin.

To finish the seat, we decided on a penetrating, semi-transparent stain, available at local hardware stores and home centers.

MORTISE & TENON

In the mortise and tenon article on page 30, we mentioned several items that can be used to cut this joint.

SPIRAL END MILL BITS. Spiral end mill bits (also called upcut spiral bits) are router bits designed to pull the waste out of the mortise as it's being routed, see mail order sources at right.

MORTISERS & ATTACHMENTS. There are a number of different stationary mortisers, as well as mortising attachments for the drill press. A few sources for these are listed at right, but there are plenty of others.

DADO BLADES

Last issue, we included an article on dado blades (see Issue No. 115, page 28). However, we neglected to mention any sources for dado blades and shims.

Dado blades and plastic shims can be found in most woodworking stores and catalogs. The new Freud "Dial-A-Width" dado blade and the magnetic shims (made by Systimatic) are available from the sources listed at right.

MAIL ORDER SOURCES

Similar project supplies and hardware may be ordered from the following companies:

General Finishes
800-783-6050

Jamestown Dist.
800-423-0030
Outdoor screws & glue

Lee Valley
800-871-8158
Dado Blades & Shims, Cupboard hardware, End mill bits, Outdoor screws & glue

McFeeley's
800-443-7937
Outdoor screws, Freud "Dial-A-Width" Dado

Systimatic
800-426-0035
Dado blades, Magnetic Shims

Woodcraft
800-225-1153
Cupboard hardware, Outdoor screws & glue, Dado blades, Magnetic shims, End mill bits, Mortising attachments

Woodsmith Store
800-835-5084
Cupboard hardware, General Finishes, Dado blades & shims, Mortisers, End mill bits, Mortising attachments

Woodworkers' Store
800-279-4441
Cupboard hardware, Outdoor screws & glue, Dado blades & shims, End mill bits

Woodworker's Supply
800-645-9292
Outdoor screws & glue, Freud "Dial-A-Width" Dado blade, Mortisers, End mill bits, Mortising attachments

WOODSMITH PROJECT SUPPLIES

If you would like to order project supplies or books from *Woodsmith Project Supplies*, please use our Toll Free order line, see below. It's open Monday through Friday, from 8 AM to 5 PM Central Time. Before calling, please have your VISA, MasterCard, or Discover Card ready.

If you would like to mail in your order, call the number below for more information concerning shipping charges as well as any applicable sales tax.

1-800-444-7527
When ordering, please use Key W116

Note: Prices subject to change after June 1998

WoodNet™ NOW ON THE WEB!

- Over 80 Woodworking Tips Online
- Project Plans You Can Download
- Forums for Woodworking, Tools, & Classifieds
- Catalog of Project Kits, Tools, & Jigs
- Power Tool Reviews
- Links to Other Woodworking Sites
- *Woodsmith/ShopNotes* Back Issue Index

Point your browser to:
http://www.augusthome.com
Select "Woodworking" from the Welcome Page menu.

Final Details

▲ **Garden Seat.** *Dimensional lumber and mortise and tenon construction make this project sturdy, while the contoured design makes it comfortable. Complete step-by-step plans begin on page 24.*

Chimney Cupboard. ► *A couple design options are built right into this country project. This glass door is just one example. Another option is that you can build the lower section by itself. Instructions start on page 6.*

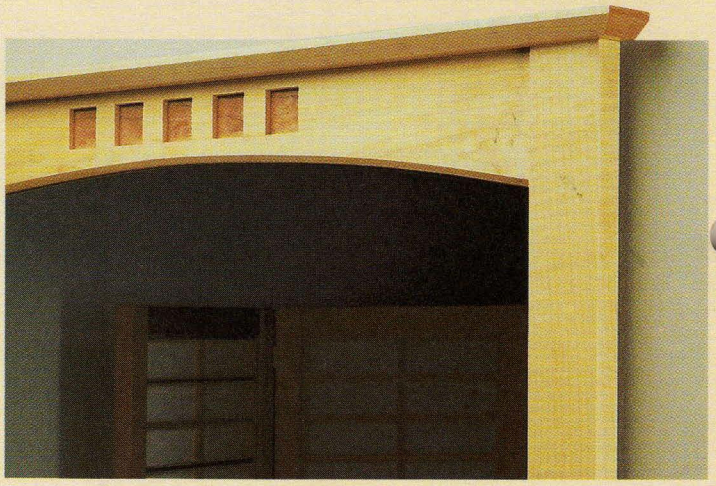

▲ **Hall Mirror.** *Here's an attractive frame you can build in a weekend, with eye-catching accent squares that are created with a simple shop-made jig, see page 16.*